DAMODER VALLEY CORPORATION(DVC)
2x660 MW - RAGHUNATHPUR TPP PHASE II-STG

TECHNICAL SPECIFICATION

FOR CONDENSER ON LOAD TUBE CLEANING SYSTEMS (COLTCS).

Specification No. : PE-TS-390-165-N001(REV 0)

VOLUME -IIB

BHARAT HEAVY ELECTRICALS LIMITED
POWER SECTOR
PROJECT ENGINEERING MANAGEMENT
PPEI BLDG., SEC-16A, PLOT NO. 25
NOIDA – 201301 (UP)

1.0 The tender document contains three (3) volumes. The bidder shall meet the requirements of all the three volumes.

1.1 **Volume -I CONDITIONS OF CONTRACT**

This consists of four parts as below :

Volume - I A : This part contains instructions to bidders for making bids to BHEL.

Volume - I B : This part contains general commercial conditions of the tender and include provision that vendor shall be responsible for the quality of item supplied by their sub-vendors.

Volume - I C : This part contains special conditions of contract.

Volume - I D : This part contains commercial conditions for erection and commissioning site work, as applicable.

1.2 **Volume - II TECHNICAL SPECIFICATIONS**

Technical requirements are stipulated in Volume II which comprises of :

Volume - II A : General Technical Conditions

Volume - II B : Technical specification including drawings, if any

1.2.1 Volume - II B :

This volume is sub-divided into following sections:

Section - A : This section outlines the scope of enquiry.

Section - B : This section provides "Project Information"

Section - C : This section indicates technical requirements specific to the contract, not covered in Section-D.

Section - D : This section comprises of standard technical specifications of equipments complete with data sheet A, B & C.
Data sheet-A specifies data and other requirements pertaining to the equipment.
Data sheet - B specifies data to be filled by the bidder (Data Sheet B is contained in Volume - III)
Data sheet - C indicates data documents to be furnished after the award of contract as per agreed schedule by the vendor (as applicable).

1.2.2 **Volume - III TECHNICAL SCHEDULES**

1.0 This volume contains technical schedules and Data Sheets - B, which are to be duly filled by the bidder and the same shall be furnished with the technical bid as per instructions given in Document No.PES-100-901 in Volume-III.

2.0 The requirements mentioned in Section C/Data Sheets-A of Section-D shall prevail and govern in case of conflict between the same and the corresponding requirements mentioned in the descriptive portion in Section -D.

INDEX

SECTION	TITLE
A	**SCOPE OF ENQUIRY**
B	**PROJECT INFORMATION**
C	**SPECIFIC REQUIREMENTS**
C1	SPECIFIC TECHNICAL REQUIREMENTS FOR CONDENSER ONLOAD TUBE CLEANING SYSTEMS .
C2	SPECIFIC TECHNICAL REQUIREMENTS (ELECTRICAL)
C3	SPECIFIC TECHNICAL REQUIREMENTS (C&I)
D	**STANDARD TECH. SPECIFICATIONS**
D1	CONDENSER ON LOAD TUBE CLEANING SYSTEMS

- STANDARD TECHNICAL SPEC.NO. PE-TS-999-165-N001
- DATA SHEET-A
- DATA SHEET-C
- QUALITY PLAN

D2	ELECTRICAL SYSTEMS
D3	CONTROL & INSTRUMENTATION SYSTEMS

SECTION - A
SCOPE OF ENQUIRY

1.00.0 **SCOPE**

This enquiry covers the design, manufacture, assembly, inspection and testing at manufacturer's and/or his sub-contractors works properly packed for delivery of the items as follows:

1.01.0 **Condenser On Load Tube Cleaning Systems :**

Condenser On Load Tube Cleaning Systems (COLTCS) complete with all accessories as per the requirements specified in different sections of this specification ***for :***

- **2X660 MW -DVC RAGHUNATHPUR TPP PHASE II- STG**

The bidder's scope also includes installation checks, commissioning, trial runs & PG Testing at site of COLTCS.

1.01.0 **The bids shall be evaluated as per NIT.**

Equipments shall be ordered separately for each project.

In the event of more than one order being placed on the same bidder, the drawings/ documents etc. shall be submitted separately for each project during detailed engg. stage for approval.

2.00.00 **GENERAL TECHNICAL INSTRUCTIONS:**

2.01.00 It is not the intent to specify herein all the details of design and manufacture. However the equipment shall conform in all respects to high standard of design, engineering and workmanship, and shall be capable of performing the required duties in a manner acceptable to Engineer/ Owner, who will interpret the meaning of drawing and specifications, and shall be entitled to reject any component or material, which in his judgement is not in full accordance herewith.

2.0.2.00 The omission of specific reference to any component/ accessory necessary for the proper performance of the equipments shall not relieve the bidder of the responsibility of providing such facilities to complete the supply of the equipments at quoted prices.

2.03.00 In case of any deviation from this Technical specification (Vol. IIB) and General Technical Conditions (Vol. IIC), the same shall be indicated in the schedule of deviations enclosed in Volume-III, Part-A. In the absence of duly filled schedules it will be assumed that the bid strictly conforms to the specification.

2.04.00 BHEL's/ Customer's representatives shall be given full access to the shop in which the equipments are being manufactured or tested and all test records shall be made available to him.

2.05.00 The equipments covered under this specification shall not be despatched unless the same have been finally inspected, accepted and shipping release issued by BHEL/ Customer

2.06.00 Un-priced copy of price bid shall be furnished alongwith the technical bid.

SECTION – B

PROJECT INFORMATION

INTRODUCTION

1.00.00 **BACKGROUND**

Details of proposed Stage / Units

Project name : RAGHUNATHPUR Thermal Power Project Phase-II

No. of existing Units x capacity : Phase-I 2 X 600 MW **- Under construction**

No. of Proposed Units x capacity : Phase-II 2x660 MW

Project setting up by : Damodar Valley Coporation

Employer's consultant : NTPC Ltd.

1.01.00 **LOCATION AND APPR0ACH**

SITE DATA		
Location	:	Raghunathpur sub-division of Purulia District, West Bengal.
Latitude and longitude	:	23° 37' 20" N, 86° 39' 50" E
Nearest Town	:	Raghunathpur – 7 Km
District Head Quarters	:	Purulia – 38 Km
Approach Road	:	Neamatpur-Purulia State Highway– 7 Km
Nearest Railhead	:	Sanka R.S. on Adra-Bhajudih Broad Gauge line of S.E. Railway – 11 Km.
Perennial Source of Cooling and Consumptive Water	:	Damodar River – 2 Km crow flight distance form the proposed plot.
Source of Coal	:	Most probable source- 'F' grade from coalfields of ECL.
Route Distance	:	60 Km from the site.
Distance of receiving S/S from TPS	:	Maithon Right Bank 400 kV sub-station – 36 Km and Ranchi 400 kV sub-station – 165 Km.
NATURE OF LAND		
Level	:	Within 20 m contour variation. This plot is above highest flood level of the area.
Soil	:	Fallow, moorum covered plot with alluvial soil underneath followed by rocky sub-strata.
Land Use	:	Fallow, unused.
Crops	:	Rainfed single-crop cultivation only on 10-15% of the area.
Irrigation	:	None.

Vicinity Plan is enclosed as **Annexure –A-I**

1.02.00 **Land**

Total area of land available for Phase-I and Phase-II : 1800 Acres

1.03.00 **Water**

Nearest Water Source	Damodar River – 2 Km crow flight distance form the proposed plot.
Proposed water requirement for the Phase-II	: 6500 m^3/hr. (without ash water recovery) : 4938 m^3/hr. (with ash water recovery)

1.04.00 **Railway Siding**

Employer intends to construct the Railway siding to project site from the nearest existing railway line. However, the same may not be available to the bidder for his use to transport equipment & material.

Bidder may visit the site and acquaint themselves with the facilities available.

1.05.00 Coal Availability and Transportation

1.05.01 **Coal Availability and Linkage**

Proposed Coal for the Phase-II	Coal available will be of 'F' grade
Design Coal GCV	: 3200 Kcal/kg

1.05.02 **Coal Quality Parameters and Fuel Oil Characteristics**

The Coal quality parameters and Fuel Oil Characteristics are as specified in Table-1, Table-3 and Table-4 at Sub-Section-V, Part-A, Section-VI of the Specification.

1.06.00 Capacity

Phase-I	:	2 x 600 MW	- Under construction
Phase-II	:	2 x 660 MW	- Present proposal

1.07.00 Meteorological data

Data of RAGHUNATHPUR is enclosed as **Annexure-A-II.**

1.08.00 **Plant Water Scheme**

The Plant water scheme is described below:.

1.08.01 **Condenser Cooling (CW) Water System**

It is proposed to provide recirculating type CW system with cooling towers. For the recirculating type CW system it is proposed to supply clarified water as make up. Raw water from the make-up water pump house shall be pumped to a Water Pretreatment Plant. The treated clarified water shall be led to the cold water channel of CW system. CW system shall be operated at a C.O.C of about 4 . The expected circulating water analysis is given in this sub-section. For carrying circulating water from CW pump house to TG-area and from TG area to cooling tower, steel lined concrete encased duct would be provided. For interconnecting CW duct with CW pump, condenser and cooling towers, steel pipes would be used. Cooled water from cooling tower will be led to CW pump house through the cold water channel by gravity.

1.08.02 **Equipment Cooling Water (ECW) System (Unit Auxiliaries)**

The plant auxiliaries of Steam Generator and Turbine Generator shall be cooled by Demineralized (DM) water in a closed circuit. The primary circuit DM water shall be cooled through plate type heat exchangers by Circulating Water tapped from CW system in a closed secondary circuit. The hot secondary circuit cooling water shall be cooled in the cooling towers and shall be returned back to the system. It is proposed to provide independent primary cooling water circuit for Steam Generator & auxiliaries and TG & its auxiliaries.

1.08.03 **Station Auxiliaries Cooling Water System**

The station auxiliaries such as Air compressors, Compressors of ash handling plant, Cooling water circuit of Air Conditioning system, compressor of mill reject system etc. shall be cooled by separate cooling water System using separate set of pumps and cooling towers.

1.08.04 **Ash Water System**

Necessary LP & HP water pumps, flushing water pumps & seal water pumps for slurry disposal pump gland sealing are provided.

1.08.05 **Other Miscellaneous Water Systems**

a) CW system blow down water shall be used for the plant service water requirement, dust suppression system of coal handling plant, makeup to the Ventilation system, ash slurry pumps sealing, sealing of Vacuum pumps (if applicable) of Ash Handling plant, make-up to fire water storage tanks and cooling water requirement of hydrogen generation plant. The service (wash water) water collected from various areas shall be treated using oil water separators, tube settlers, coal settling pits etc. as per requirement and treated water from liquid effluent treatment plant shall be recycled back to the service water system for re-use. The excess service water shall be led to central monitoring basin for disposal.

b) Separate water Pre-treatment plants are proposed for Circulating Water (PT-CW) system, Demineralization Plant (PT-DM) plant and potable (PT-Pot) water systems.

c) The drinking water requirement of the plant and colony shall be provided from the above mentioned Water (PT-Pot) pretreatment plant.

d) Steam Cycle make-up water, makeup to the primary circuit of ECW (unit auxiliaries) system, boiler fill water and makeup to the hydrogen generation plant shall be provided from Dematerializing plant.

e) The quality of cooling water & DM water is given in this sub-section at **Annexure-A-III**.

1.09.00 **Criteria for Wind Resistant Design of Structures and Equipment**

All structures and equipment of the power plant, including plant auxiliary structures and equipment, shall be designed for wind forces as given in Annexure-A-IV of this sub section.

1.10.00 **Criteria for Earthquake Resistant Design of Structures and Equipment**

All power plant structures and equipment, including plant auxiliary structures and equipment shall be designed for seismic forces as given in Annexure-A-V of this sub section.

ANNEXURE–A-I

VICINITY PLAN (9586-999-NOG-J-001)

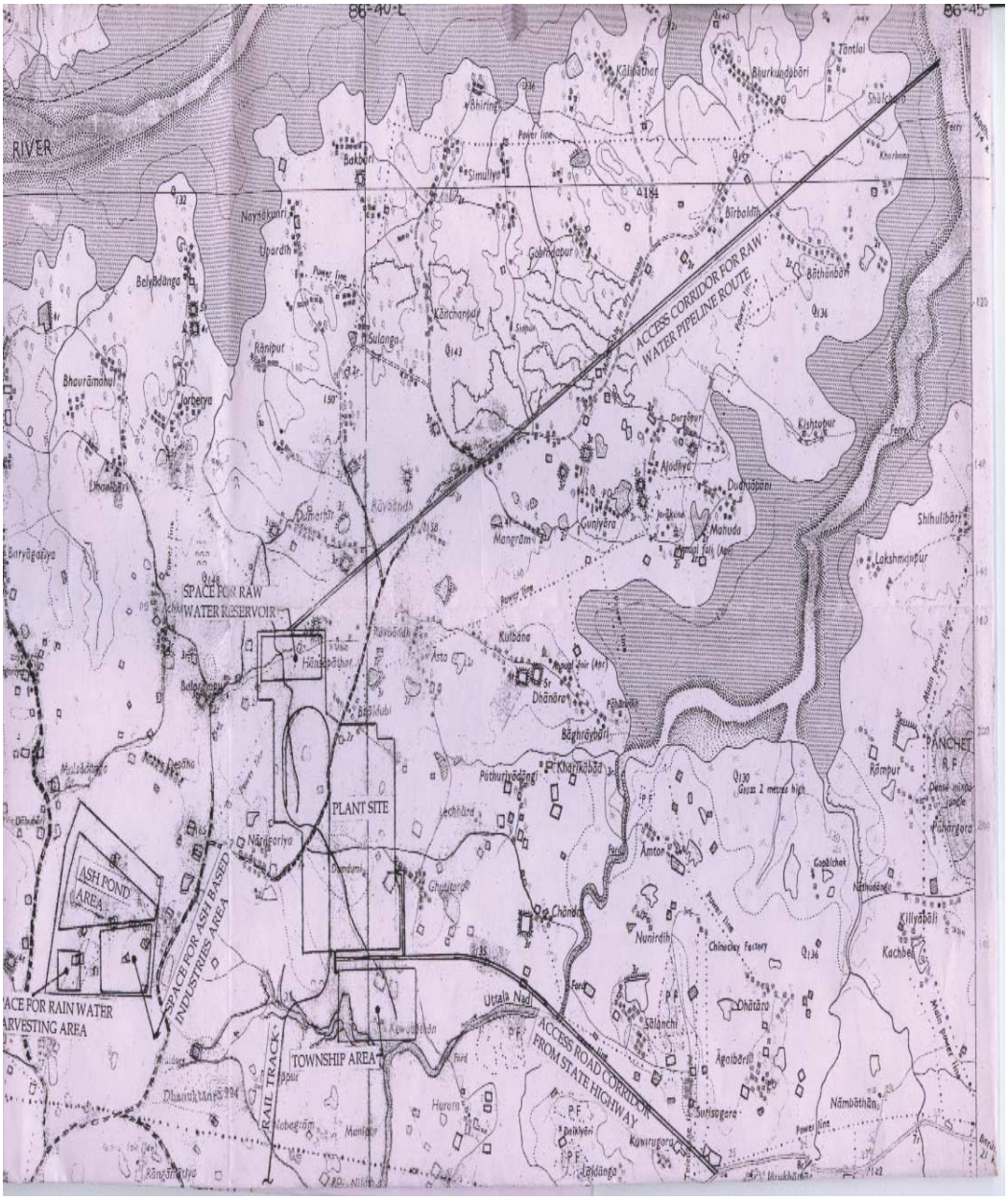

Table
Climatological data

DAMODAR VALLEY CORPORATION

STATION : Purulia LAT: 23 20 N LONG: 86 25 E HT. ABOVE M.S.L. 255 METERS
DATA 1951 TO 1980

Annexure - 4.1
Sheet 1 of 2

CLIMATOLOGICAL TABLE OF PURULIA

		Mean Temperature						Extremes				Cloud				Rainfall						
MN	SLP	DB	WB	MAX	MIN	HIGH	LOW	MAX	DT	MIN	DT	RH	VP	TOT	LOW	TOT	RAINY	WET	DRY	HEAVY	DAY	WS
1	988.5	16.4	12.8	25.3	12.4	29.3	8.7	33.4	01	5.9	17	64	11.9	1.7	1.3	12.9	1.2	50.8	0.0	34.8	04	3.1
	984.9	22.5	16.2						1977		1962	50	13.5	2.0	1.3			1971			1966	
2	986.4	19.3	14.4	28.5	15.2	33.7	10.6	37.3	22	7.2	08 *	57	12.5	1.4	1.0	19.3	1.8	75.6	0.0	62.2	02	3.9
	982.4	26.3	17.6						1967		1956	40	13.1	1.9	1.5			1979			1979	
3	983.8	24.8	17.7	34.0	19.8	38.7	15.4	41.7	31	12.5	10	48	14.7	1.7	1.0	21.6	2.1	67.9	0.0	35.6	26	4.5
	979.4	31.6	20.0						1955		1979	32	14.3	2.4	1.6			1956			1977	
4	980.2	29.9	21.3	38.5	24.5	42.5	19.5	44.3	30	13.5	02	46	18.5	1.9	1.1	32.8	2.5	99.0	0.5	60.0	25	5.6
	975.5	35.5	22.2						1980		1965	31	16.3	3.2	2.2			1971	1973		1976	
5	976.0	31.4	24.4	39.6	26.5	44.1	21.6	46.3	20	17.9	08	56	24.9	2.5	1.2	47.9	3.5	162.0	4.3	50.8	31	6.7
	971.7	36.0	24.3						1972		1977	39	21.1	4.3	2.7			1977	1957		1971	
6	972.3	29.8	25.5	36.2	26.2	42.3	22.5	46.2	10	19.2	18	71	29.2	5.5	3.4	190.4	10.0	378.0	75.1	122.8	26	6.7
	969.0	31.8	25.6						1966		1980	63	27.8	6.6	4.8			1968	1958		1978	
7	972.3	27.6	25.4	32.1	25.1	35.6	22.5	38.9	05	17.8	14	83	30.7	6.7	5.2	284.3	16.4	502.7	106.3	148.3	06	6.0
	969.5	29.0	25.8						1966		1953	78	30.7	7.1	5.3			1952	1972		1951	
8	973.5	27.3	25.3	31.5	24.8	34.5	22.6	37.8	03	17.2	27	85	30.7	6.7	5.5	315.4	15.9	520.0	200.5	150.8	28	5.4
	970.4	28.7	25.8						1972		1953	79	30.8	7.2	5.5			1967	1955		1972	
9	977.4	27.2	25.0	31.6	24.4	34.3	22.3	36.1	07	17.2	10	83	29.9	5.4	4.2	280.9	12.7	773.6	52.4	181.6	15	4.9
	974.2	28.4	25.3						1955		1953	78	29.8	6.5	4.9			1978	1968		1958	
10	983.1	25.5	22.4	31.1	21.9	33.9	18.3	39.4	01	15.8	24	76	24.7	3.0	2.3	89.6	4.9	233.1	3.2	116.8	19	3.5
	979.8	27.9	23.4						1974		1964	67	24.9	3.8	2.6			1973	1979		1980	
11	987.0	21.4	17.5	28.6	17.0	31.3	13.6	34.6	23	10.9	27	66	16.9	1.6	1.0	12.6	1.0	78.5	0.0	55.4	08	2.9
	983.6	24.9	19.3						1979		1967	57	18.0	2.0	1.2			1955			1955	
12	988.9	17.3	13.7	25.6	12.9	28.8	9.6	33.3	01	5.7	26	64	12.8	1.4	0.7	3.2	0.4	19.0	0.0	14.8	03	2.8
	985.3	22.0	16.4						1955		1961	54	14.3	1.6	0.8			1978			1978	
YR	980.8	24.8	20.5	31.9	20.9	44.5	8.4	46.3		5.7		67	21.5	3.3	2.3	1347.1	72.4	2138.8	927.6	181.6		4.7
LY	977.1	28.7	21.8									56	21.2	4.1	2.9			1978	1957			
YRS	30	30	30	30	30	30	30	31		31		30	30	30	24	30	30	31	31	31		30
	30	30	30									30	30	30	24							

* Occurred More Than Once

Detailed Project Report
for 2x500 (+20%) MW Coal Based TPS at Raghunathpur

DAMODAR VALLEY CORPORATION

STATION : Purulia LAT: 23 20 N LONG: 86 25 E HT. ABOVE M.S.L. 255 METERS
DATA 1951 TO 1980

Annexure - 4.1
Sheet 2 of 2

MN	PPT	HAIL	THUN	FOG	D.STM	SQUA	Wind Speed 62	61	19	0	% Wind Direction N	NE	E	SE	S	SW	W	NW	0	Total Cloud 0	T-2	3-5	6-7	8	Low Cloud 0	T-2	3-5	6-7	8	F8	Visibility <1	1-4	4-10	10-20	>20
1	1.8	0.0	0.5	0.1	0.0	0.0	0	0	25	6	8	3	1	2	1	5	18	40	22	18	4	4	2	3	24	2	2	1	2	0	0.1	4.3	6.6	2.4	17.6
							0	0	10	21	8	8	1	3	2	1	2	12	63	15	6	4	3	3	21	4	3	1	2	0	0.0	2.7	11.0	7.9	9.4
2	2.5	0.0	1.5	0.0	0.1	0.0	0	0	23	5	7	3	0	3	2	12	14	38	21	18	3	3	1	3	22	2	2	1	1	0	0.0	3.5	4.2	3.3	17.0
							0	0	16	12	8	8	1	3	1	4	5	27	43	14	5	4	2	3	18	4	3	1	2	0	0.0	0.9	3.7	7.6	15.8
3	3.2	0.1	2.9	0.3	0.4	0.0	0	0	24	7	6	3	1	5	5	13	12	35	20	19	4	4	2	2	24	2	2	1	2	0	0.0	1.1	3.8	4.3	21.8
							0	0	21	10	7	6	2	7	4	6	8	31	29	16	5	4	3	3	20	4	4	1	2	0	0.0	0.2	1.9	3.2	25.7
4	3.4	0.2	4.6	0.1	0.7	0.0	0	0	26	4	4	3	1	15	9	16	13	25	14	17	4	5	2	2	23	3	2	1	1	0	0.0	0.1	1.3	3.8	24.8
							0	1	25	4	6	8	4	11	5	11	7	34	14	9	6	6	4	5	14	6	6	2	2	0	0.0	0.3	1.5	2.5	25.7
5	5.2	0.1	6.8	0.0	0.8	0.0	0	0	27	4	2	6	3	25	14	20	5	13	12	14	5	5	3	4	23	2	3	2	1	0	0.0	0.2	1.1	1.9	27.8
							0	0	27	4	7	10	4	27	8	9	4	21	10	6	4	8	5	8	13	5	8	2	3	0	0.0	0.3	1.7	3.9	25.1
6	12.7	0.0	9.6	0.0	0.4	0.0	0	0	28	2	3	7	4	30	14	18	6	10	8	4	2	7	6	11	11	3	6	4	6	0	0.0	0.6	2.4	4.8	22.2
							0	0	26	4	4	12	5	34	10	11	4	11	9	1	1	5	6	17	5	4	10	3	8	0	0.0	0.8	4.3	6.9	18.0
7	20.7	0.0	7.8	0.0	0.0	0.0	0	0	28	3	3	10	6	24	11	22	4	8	12	0	1	5	8	17	5	3	8	5	10	0	0.0	0.5	3.1	7.3	20.1
							0	0	27	4	3	9	5	29	14	16	3	8	13	1	0	4	6	20	2	3	12	4	10	0	0.0	0.7	5.9	7.6	16.8
8	19.7	0.0	8.3	0.0	0.0	0.0	0	0	28	3	4	13	6	27	12	14	5	11	8	0	1	5	8	17	5	3	8	5	10	0	0.0	0.4	2.4	7.6	20.6
							0	0	27	4	1	10	6	35	10	11	4	9	14	0	0	4	6	21	2	3	11	4	11	0	0.0	0.4	5.8	6.6	18.2
9	15.5	0.0	7.5	0.1	0.0	0.0	0	0	26	4	7	10	5	26	6	10	5	18	13	2	4	7	6	11	9	3	6	4	8	0	0.0	0.6	2.1	4.5	22.8
							0	0	23	7	4	12	5	31	8	6	2	9	23	0	2	6	6	16	2	5	11	3	9	0	0.0	1.4	5.8	5.9	16.9
10	6.8	0.0	2.5	0.1	0.0	0.0	0	0	24	7	11	11	3	11	4	6	8	25	21	13	4	5	3	6	18	3	4	2	4	0	0.0	0.6	2.6	3.1	24.7
							0	0	13	18	5	9	3	15	2	2	2	7	55	6	7	7	4	7	10	8	7	2	4	0	0.0	1.0	4.9	8.4	16.7
11	1.4	0.0	0.2	0.0	0.0	0.0	0	0	24	6	10	5	0	2	1	4	12	45	21	18	4	4	2	2	23	2	2	1	2	0	0.0	1.3	3.1	3.8	21.8
							0	0	7	23	5	5	1	2	1	1	1	6	78	14	7	5	2	2	19	6	3	1	1	0	0.0	2.4	12.6	5.5	9.5
12	0.6	0.0	0.1	0.0	0.0	0.0	0	0	25	6	6	1	0	1	1	4	17	49	21	20	4	3	2	2	26	1	2	1	1	0	0.0	3.8	3.7	3.9	19.6
							0	0	6	25	6	4	0	1	0	1	1	8	79	18	6	4	1	2	24	4	2	0	1	0	0.0	7.6	12.3	4.0	7.1
YR	93.5	0.4	52.3	0.7	2.4	0.0	0	0	308	57	6	6	3	14	7	12	10	26	16	143	40	57	45	80	213	29	47	28	48	0	0.1	17.0	36.4	50.7	260.8
LY							0	1	228	136	5	8	3	17	5	7	4	15	36	100	49	61	48	107	150	56	80	24	55	0	0.0	18.7	71.4	70.0	204.9
YRS				28					24					29								29					29						29		
									24					29								29					29						29		

ANNEXURE-A-III
PAGE 1 OF 3

COOLING WATER ANALYSIS

CONSTITUTUENTS	As	CONTENTS
Calcium	$CaCO_3$	95.0 ppm
Magnesium	$CaCO_3$	58.0 ppm
Sodium & Potassium	$CaCO_3$	68.0 ppm
TOTAL CATIONS	$CaCO_3$	221.0 ppm
(except iron in solution)		
Bicarbonate	$CaCO_3$	115.0 ppm
Carbonate	$CaCO_3$	-- ppm
Sulphate	$CaCO_3$	80.0 ppm
Chloride	$CaCO_3$	26.0 ppm
Nitrate	$CaCO_3$	-- ppm
Phosphate	$CaCO_3$	-- ppm
TOTAL ANIONS	$CaCO_3$	221.0 ppm
Silica	SiO_2	13.5 ppm
pH value at 25^0C		8.1
Total Suspended Solids		1000 ppm (maximum)
Turbidity		1000 NTU (maximum)

ANNEXURE-A-III
PAGE 2 OF 3

DESIGN CLARIFIED WATER ANALYSIS		
CONSTITUTUENTS	**As**	**CONTENTS**
Calcium	$CaCO_3$	116.5 ppm
Magnesium	$CaCO_3$	58.0 ppm
Sodium & Potassium	$CaCO_3$	68.0 ppm
TOTAL CATIONS	$CaCO_3$	242.0 ppm
(except iron in solution)		
Bicarbonate	$CaCO_3$	93.5 ppm
Carbonate	$CaCO_3$	--- ppm
Sulphate	$CaCO_3$	116.0 ppm
Chloride	$CaCO_3$	33.0 ppm
Nitrate	$CaCO_3$	--- ppm
Phosphate	$CaCO_3$	--- ppm
TOTAL ANIONS	$CaCO_3$	242.5 PPM
Silica	SiO_2	13.5 ppm
pH value at 25^0C		7.5 – 8.0
Turbidity		15 NTU(maximum)
Residual Chlorine	Cl_2	0.5 ppm

Note: the above figures have been arrived with due consideration of injection of 80 ppm alum, 20 ppm lime and 5 ppm chlorine in raw water.

ANNEXURE-A-III
PAGE 3 OF 3

ANALYSIS OF DM WATER TO BE USED FOR MAKE-UP WATER TO CONDENSER		
Sl. No.	Characteristics	Value
1.	Silica (MAX.)	0.02 ppm as SiO_2
2.	Iron as Fe	Nil
3.	Total Hardness	Nil
4.	pH Value	6.8-7.2
5.	Conductivity	Not more than 0.1 micro mhos / cm excluding the effects of free CO_2

Annexure – A-IV

CRITERIA FOR WIND RESISTANT DESIGN OF STRUCTURES AND EQUIPMENT

All structures shall be designed for wind forces in accordance with IS:875 (Part-3) and as specified in this document. See Appendix-I to **Annexure-A-IV** for site specific information.

Along wind forces shall generally be computed by the Peak (i.e. 3 second gust) Wind Speed method as defined in the standard.

Along wind forces on slender and wind sensitive structures and structural elements shall also be computed, for dynamic effects, using the Gust Factor or Gust Effectiveness Factor Method as defined in the standard. The structures shall be designed for the higher of the forces obtained from Gust Factor method and the Peak Wind Speed method.

Analysis for dynamic effects of wind must be undertaken for any structure which has a height to minimum lateral dimension ratio greater than “5” and/or if the fundamental frequency of the structure is less than 1 Hz.

Susceptibility of structures to across-wind forces, galloping, flutter, ovalling etc. should be examined and designed/detailed accordingly following the recommendations of IS:875(Part-3) and other relevant Indian standards.

It should be estimated if size and relative position of other structures are likely to enhance the wind loading on the structure under consideration. Enhancement factor, if necessary, shall suitably be estimated and applied to the wind loading to account for the interference effects.

Damping in Structures

The damping factor (as a percentage of critical damping) to be adopted shall not be more than as indicated below for:

a) Welded steel structures : 1.0%

b) Bolted steel structures : 2.0%

c) Reinforced concrete structures : 1.6%

d) Steel stacks : As per IS:6533 & CICIND Model Code whichever is more critical.

Appendix-I to **Annexure-A-IV**

The various design parameters, as defined in IS: 875 (Part-3), to be adopted for the project site shall be as follows:

a) The basic wind speed "V_b" at ten metres above the mean ground level : 47 metres/second

b) The risk coefficient "K_1" : 1.07

c) Category of terrain : Category-2

Note: Notwithstanding the values of the above mentioned parameters, the design wind pressure so computed at any point shall not be taken less than 1500 N/Sq. metre for all classes of structures, i.e. A, B & C, as defined in IS: 875 (Part-3).

Annexure-A-V

CRITERIA FOR EARTHQUAKE RESISTANT DESIGN OF STRUCTURES AND EQUIPMENT

All structures and equipment shall be designed for seismic forces adopting the design parameters provided in this document and using the provisions in accordance with IS:1893 (Part 1):2002 and IS:1893 (Part 4):2005. Pending finalization of Parts 2, 3 and 5 of IS:1893, provisions of part 1 shall be read along with the relevant clauses of IS:1893:1984, for structures other than the buildings and industrial structures including stack-like structures.

The peak ground horizontal acceleration for the project site, the acceleration spectral coefficients (in units of gravity acceleration 'g') in the horizontal direction for the various damping values and the multiplying factor (to be used over the spectral coefficients) for evaluating the design acceleration spectra are as given at **Appendix-I** to **Annexure-A-V.**

Vertical acceleration spectral values shall be taken as 2/3rd of the corresponding horizontal values.

The design acceleration spectra specified at Annexure-I shall be used in place of the response acceleration spectra, given at figure-2 in IS:1893 (Part 1) and Annex B of IS:1893 (Part 4) is used. The acceleration spectra along with multiplying factors specified in Annexure-I includes the effect of the seismic environment of the site, the importance factor related to the structures and the response reduction factor. Hence, the design spectra do not require any further consideration of the zone factor (Z), the importance factor (I) and response reduction factor (R) as used in the IS:1893 (Part 1 and Part 4).

Damping in Structures

The damping factor (as a percentage of critical damping) to be adopted shall not be more than as indicated below for:

a)	Steel structures	:	2%
b)	**Reinforced Concrete structures**	:	5%
c)	Reinforced Concrete Stacks	:	3%
d)	Steel stacks	:	2%

Method of Analysis

Since most structures in a power plant are irregular in shape and have irregular distribution of mass and stiffness, dynamic analysis for obtaining the design seismic forces shall be carried out using the response spectrum method. The number of vibration modes used in the analysis should be such that the sum total of modal masses of all modes considered is at least 90 percent of the total seismic mass and shall also meet requirements of IS:1893 (Part 1). Modal combination of the peak response quantities shall be performed as per Complete Quadratic Combination (CQC) method or by an acceptable alternative as per IS:1893 (Part 1).

In general, seismic analysis shall be performed for the three orthogonal (two principal horizontal and one vertical) components of earthquake motion. The seismic response from the three components shall be combined as specified in IS:1893 (Part 1).

For buildings, if the design base shear (V_B) obtained from modal combination is less than the base shear ($\bar{V}_B$) computed using the approximate fundamental period (T_a) given in IS:1893:Part 1 and using acceleration spectra with appropriate multiplying factor specified at Annexure-I, the response quantities (e.g. member forces, displacements, storey forces, storey shears and base reactions) shall be enhanced in the ratio of $\bar{V}_B$/ V_B. However, no reduction is permitted if $\bar{V}_B$ is less than V_B.

For regular buildings less than 12m in height, design seismic base shear and its distribution to different floor levels along the height of the building may be carried out as specified under clause 7.5, 7.6 & 7.7 of IS:1893 (Part 1) and using design acceleration spectra specified at Annexure-I. The design horizontal acceleration spectrum value (Ah) shall be computed for the fundamental natural period as per clause 7.6 of IS:1893 (Part 1) using spectral acceleration coefficients with appropriate multiplying factor given in Annexure-I. Further, the spectral acceleration coefficient shall get restricted to the peak spectral value if the fundamental natural period of the building falls to the left of the peak in the spectral acceleration curve.

Design/Detailing for Ductility for Structures

The design acceleration spectra is a reduced spectra and has an in-built allowance for ductility. Structures shall be engineered and detailed in accordance with relevant Indian/International standards to achieve ductility.

Appendix-I to Annexure-A-V

SEISMIC PARAMETERS FOR DESIGN OF STRUCTURES AND EQUIPMENT

The various seismic parameters for the project site shall be as follows:

1) Peak ground horizontal acceleration (MCE) : 0.16g

2) Multiplying factor to be applied to the horizontal acceleration spectral coefficients (in units of gravity acceleration 'g') to obtain the design acceleration spectra

a) for ordinary moment resisting steel frames designed and detailed as per IS:800 : 0.047

b) for braced steel frames designed and detailed as per IS:800 : 0.035

c) For special moment resisting RC frames designed and detailed as per IS:456 and IS:13920 : 0.028

d) for steel chimney : 0.070

e) for design of structures not covered under 2 (a) to 2 (d) above and under 3 below : 0.047

3) Multiplying factor to be applied to the horizontal acceleration spectral coefficients (in units of gravity acceleration 'g') for design of equipment and structures where inelastic action is not relevant or not permitted : 0.093

Note: g = Acceleration due to gravity

The horizontal seismic acceleration spectral coefficients are furnished in subsequent pages.

Appendix-I to Annexure-A-V

HORIZONTAL SEISMIC ACCELERATION SPECTRAL COEFFICIENTS
(In units of 'g')
For Raghunathpur Project

Time Period	Damping Factor (as a percentage of critical damping)	
(Sec)	2%	5%
0.000	1.000	1.000
0.020	1.500	1.300
0.040	2.000	1.600
0.060	2.500	1.900
0.080	3.000	2.200
0.090	3.250	2.350
0.100	3.500	2.500
0.120	3.500	2.500
0.140	3.500	2.500
0.160	3.500	2.500
0.180	3.500	2.500
0.200	3.500	2.500
0.220	3.500	2.500
0.240	3.500	2.500
0.260	3.500	2.500
0.280	3.500	2.500
0.300	3.500	2.500
0.320	3.500	2.500
0.340	3.500	2.500
0.360	3.500	2.500
0.380	3.500	2.500
0.400	3.500	2.500
0.420	3.333	2.381
0.440	3.182	2.273
0.460	3.043	2.174
0.480	2.917	2.083
0.500	2.800	2.000
0.520	2.692	1.923
0.540	2.593	1.852
0.550	2.545	1.818
0.560	2.500	1.786
0.580	2.414	1.724
0.600	2.333	1.667
0.620	2.258	1.613
0.640	2.188	1.563

Appendix-I to Annexure-A-V

HORIZONTAL SEISMIC ACCELERATION SPECTRAL COEFFICIENTS
(In units of 'g')
For Raghunathpur Project

Time Period	Damping Factor (as a percentage of critical damping)	
(Sec)	2%	5%
0.660	2.121	1.515
0.670	2.090	1.493
0.680	2.059	1.471
0.700	2.000	1.429
0.720	1.944	1.389
0.740	1.892	1.351
0.760	1.842	1.316
0.780	1.795	1.282
0.800	1.750	1.250
0.820	1.707	1.220
0.840	1.667	1.190
0.860	1.628	1.163
0.880	1.591	1.136
0.900	1.556	1.111
0.920	1.522	1.087
0.940	1.489	1.064
0.960	1.458	1.042
0.980	1.429	1.020
1.000	1.400	1.000
1.020	1.373	0.980
1.040	1.346	0.962
1.060	1.321	0.943
1.080	1.296	0.926
1.100	1.273	0.909
1.120	1.250	0.893
1.140	1.228	0.877
1.160	1.207	0.862
1.180	1.186	0.847
1.200	1.167	0.833
1.220	1.148	0.820
1.240	1.129	0.806
1.260	1.111	0.794
1.280	1.094	0.781
1.300	1.077	0.769
1.320	1.061	0.758
1.340	1.045	0.746

Appendix-I to Annexure-A-V

HORIZONTAL SEISMIC ACCELERATION SPECTRAL COEFFICIENTS
(In units of 'g')
For Raghunathpur Project

Time Period	Damping Factor (as a percentage of critical damping)	
(Sec)	2%	5%
1.360	1.029	0.735
1.380	1.014	0.725
1.400	1.000	0.714
1.420	0.986	0.704
1.440	0.972	0.694
1.460	0.959	0.685
1.480	0.946	0.676
1.500	0.933	0.667
1.520	0.921	0.658
1.540	0.909	0.649
1.560	0.897	0.641
1.580	0.886	0.633
1.600	0.875	0.625
1.620	0.864	0.617
1.640	0.854	0.610
1.660	0.843	0.602
1.680	0.833	0.595
1.700	0.824	0.588
1.720	0.814	0.581
1.740	0.805	0.575
1.760	0.795	0.568
1.780	0.787	0.562
1.800	0.778	0.556
1.820	0.769	0.549
1.840	0.761	0.543
1.860	0.753	0.538
1.880	0.745	0.532
1.900	0.737	0.526
1.920	0.729	0.521
1.940	0.722	0.515
1.960	0.714	0.510
1.980	0.707	0.505
2.000	0.700	0.500
2.020	0.693	0.495
2.040	0.686	0.490
2.060	0.680	0.485

Appendix-I to Annexure-A-V

HORIZONTAL SEISMIC ACCELERATION SPECTRAL COEFFICIENTS
(In units of 'g')
For Raghunathpur Project

Time Period	Damping Factor (as a percentage of critical damping)	
(Sec)	2%	5%
2.080	0.673	0.481
2.100	0.667	0.476
2.150	0.651	0.465
2.200	0.636	0.455
2.250	0.622	0.444
2.300	0.609	0.435
2.350	0.596	0.426
2.400	0.583	0.417
2.450	0.571	0.408
2.500	0.560	0.400
2.550	0.549	0.392
2.600	0.538	0.385
2.650	0.528	0.377
2.700	0.519	0.370
2.750	0.509	0.364
2.800	0.500	0.357
2.850	0.491	0.351
2.900	0.483	0.345
2.950	0.475	0.339
3.000	0.467	0.333

SECTION – C

SPECIFIC REQUIREMENTS

SECTION C1 : CONDENSER ONLOAD TUBE CLEANING

SECTION C2 : ELECTRICAL SYSTEMS

SECTION C3 : C&I SYSTEMS

SECTION C1

CONDENSER ONLOAD TUBE CLEANING SYSTEMS

(MECHANICAL DETAILS)

1.0 GENERAL

The Condenser On load Tube Cleaning Systems (COLTCS) complete with all accessories shall conform to the standard technical specifications (Section-D) and Data Sheet-A enclosed herewith. In addition the requirements of this section C shall also be complied with. However, wherever the details given in Section-D and Data Sheet-A are different, the requirements of Data Sheet-A shall prevail. Similarly in the event of contradictions between Section-C & Section-D/ Data Sheet-A, Section-C shall prevail.

Section C consists of 3 parts viz. Sec. C1, C2 and C3 for Mechanical, Electrical and C&I respectively, the requirements of all 3 sections shall be complied with.

2.0 DESCRIPTION OF EQUIPMENTS :

2.1 Condenser on load tube cleaning systems (COLTCS) :

The condenser on load tube cleaning system (COLTCS) is intended to prevent formation of various forms of fouling and scaling in the condenser tubes. The cooling water system is of closed circuit type with cooling towers or open circuit type as specified. The water analysis is indicated in project information in section B.

3.0 SCOPE OF SUPPLY UNDER THE SPECIFICATION IN THE BIDDER'S SCOPE FOR COLTCS.

3.1 The scope of supply for COLTCS covered under this specification is as under.

The size, MOC's and other particulars of the equipments for various projects are detailed in Data Sheet A annexed with Section – D of the specification.

SL.NO.	PROJECT	COLTCS
1.	**2x660 MW DVC RAGHUNATHPUR TPP PHASE II -STG**	2 SETS PER UNIT viz. TOTAL 4 SETS FOR BOTH UNIT.

3.2 SCOPE OF SUPPLY IN THE BIDDER'S SCOPE FOR COLTCS:

3.2.1 Each set of COLTCS for each projects shall comprise of following :

a) One No. Ball Separator at Condenser CW outlet pipe.
b) One No. Ball recirculation pump with drive motor.
c) One No. Ball collector.

d) One No. Manual ball sorter (Bucket type sorter with sieves to manually sort out the undersized balls by shaking the sieved bucket manually) for each set of COLTCS.

e) Differential pressure measuring system for ball separator. DP measuring system shall comprise of 2 nos. DPT +1 no. DPG for each COLTCS. Instrument shall be with *Remote seal* arrangement. Stubs for DPT and DPG shall be independent.

f) Ball monitoring system comprising of an independent balls recirculation monitor and an independent balls oversize monitor. If bidder is not manufacturing Ball over size monitor then they can offer other alternatives like automatic ball sorter etc.

g) Length of Ball separator, Scope of Counter Flange, Nuts and bolts shall be as per Annexure- I of section C1.
Thickness of body flange and counter flange shall be as per Drg no PE-DG-999-141-MO17 enclosed at enclosures at Annexure-II.

h) Complete Pipe work, including interconnection piping, flanges/counter flanges for valves & pipes, bends, fittings, distributors, nozzles and support installation materials shall be in Bidder's scope. Bidder shall finalize the pipework to suit the layout at contract stage in such a way that no site welding is required for his pipework otherwise the same shall be carried out by bidder at site.

i) The Electrical and C&I item / accessory as specified in succeeding clause/ respective sections herein.

j) Power and Control cables between starter Panel (Switch Gear) and various drives in bidder's scope of supply for all projects.

k) Starter Panel (Switch Gear Panel) shall be as follows:

a) 2 Sets of COLTCS shall have one Common Starter Panel (Switch Gear Panel) for DCS based control system.

Switch Gear Panel should have suitable arrangement like Bus Coupler for providing redundancy to incoming supply feeder (1Working + 1 Standby feeder).

l) Control cables between field instruments and control panel.

m) All the field instruments stipulated in this specification shall be in Bidder's scope.

n) Commissioning balls and other commissioning spares on "As required basis".

o) Set of mandatory spares as indicated in Data Sheet A.

p) Supporting arrangement complete with foundation plates, anchor bolts, nuts, sleeves, inserts, all installation materials, fixing bolts, clamps and other accessories etc for complete equipment supplied under this package.

q) Finish paints for touch up painting of equipment after erection at site, in sealed containers.

r) Set of special tools and tackles if required for maintenance and erection of the equipment supplied.

s) Various drawings, data test reports/ certificates instruction manuals for erection operation and maintenance etc. as specified in Data Sheet-C. and cables schedule indicating BOQ for power & control cables.

t) Panels & Instruments: Scope and Type as specified in C&I section wherever required.

Any item not specified but required to make COLTCS a complete package shall also be in bidder's scope.

4.0 SCOPE OF SERVICES INCLUDED IN THE BIDDER'S SCOPE :

The bidder's scope also includes following services at site, for scope under this specification for COLTCS for respective projects

a) Installation checks (Erection in BHEL's scope).
b) Commissioning of equipment.
c) Trial run for requisite period
d) Performance Testing.

The trial run of equipment shall be generally conducted immediately after commissioning while PG testing shall be conducted at a later date. These activities for different units shall be timed separately.

The no. of visits may be suitably assessed by bidders as per their experience with site stay periods on as required basis.

In the event of order number of visits as follows shall be made as a minimum with charges included in the bidder's base price itself.

- **For drawings/documents approval**
  In the event of order all drawings / documents in soft as well as hard copy shall be submitted within 2 weeks of LOI for approval.

  Further on receipt of Customer comments, if required bidder's engineer shall visit BHEL/ Customer alongwith soft copy to resolve all issues and incorporate comments in the soft copy for across the table finalisation and Category-I approval.

- **Site Visits :**

  i. No. of site visits for combined activities of erection checks and commissioning for COLTCS as applicable shall be one per unit - for both sets of equipments of one unit. Time duration for erection and commissioning shall be "on as required basis" with equipments run for trial operation thereafter for requisite period to demonstrate satisfactory operation.

     However the no. of visits may be suitably assessed by bidders as per their experience with site stay periods on as required basis.

  ii. Bidder shall demonstrate guarantees including balls recovery, life of balls, pressure drops, etc. at site during subsequent visit for COLTCS of each unit.

  iii. For trouble shooting on "as required basis".

5.0 EXCLUSIONS :

The following are excluded from the bidder's scope .

5.1 Civil foundation works required for installation
5.2 Erection of Equipment at site.

6.0 DESIGN CONSTRUCTION :

In addition to the requirements of Section-D the following shall also be complied with for packages/ projects under scope of this specification:

6.1 For COLTCS - Layout Piping Arrangement Drg. are enclosed in the specifications and same is enclosed at Annexure-III.

6.2 Thickness of body flange and counter flange of COLTCS shall be as per Drg no PE-DG-999-141-MO17 enclosed at enclosures at Annexure-II.

6.3 The materials of construction specified in Data Sheet-A are minimum requirements and materials of construction for other components not specified shall be similarly selected by the bidder for the intended duty which shall be subject to purchaser's approval during detailed engineering in the event of order.

6.4 Housing/ body of COLTCS shall be designed and manufactured as per the applicable codes for pressure vessels and to take care of force and moments as enclosed in the specification. However in no case thickness of housing/ body shall be less than connecting pipe thickness as specified in Data Sheet-A of COLTCS.

6.5 Adequate provision for future installation of Cathodic Protection for COLTCS (Sacrificial type) shall be kept by the bidder in the equipment.

6.6 Any flow straightner for streamlining the CW flow in balls collecting strainer if required shall be supplied by the bidder along with mounting arrangement and the fixing details.

6.7 Velocity in the pipe work shall be less than 1.5 m/ sec for pump suction and less than 2.2 m/ sec. in other pipe work. All valves upto 150 NB shall be ball valves. For higher sizes, gate/ globe/ B.F. valves shall be provided. All instrument valves shall be needle valves.

7.0 Performance Guarantee and Testing :

The Tube Cleaning Systems shall be guaranteed to meet the performance requirements specified in Section-D and also for trouble free operation after commissioning. Schedule of performance guarantees (enclosed in Volume III) duly filled and signed shall be furnished with the bid.

The Performance guarantees of equipments shall stand valid till the satisfactory completion of performance testing & its acceptance by BHEL/ Consultant/Customer. If the guarantee period specified in the Commercial Specification is higher, same shall prevail.

8.0 Performance Guarantee and Bid Evaluation criteria for Condenser on Load Tube Cleaning System.

8.1 **Condenser On Load Tube Cleaning Systems.**

8.1.1 Performance Parameters to be guaranteed by bidders for COLTCS of all projects shall be as under :

i) Pressure drop in ball separator in clean condition viz. after back washing.

ii) Percentage recovery of balls (min. 90% recovery)

iii) Life of Sponge Rubber Ball (Min. 3 weeks).

Any deviation to above balls life and percentage recovery will not be accepted.

Bidder to indicate the life of sponge rubber ball and nos. of balls lost during 1000 hours of plant operation and pressure Drop in Ball seperator in clean condition in the Guarantee schedule and shall demonstrate same at site.

In case the successful bidder fails to demonstrate any of these parameters he shall carry out modifications at his own cost, to purchasers approval.
In case bidder fails to demonstrate above parameters to purchaser's satisfaction even after modification carried by him at site, the purchaser has the right to reject the equipment out rightly.

8.1.2 Bidder to note that bids shall be evaluated on account of pressure drop across ball collecting strainer (in clean condition) and liquidated damages on account of not meeting the same during PG test shall be in accordance with following:

A) Bid Evaluation Criteria & Liquidated Damages:

The bids received shall be evaluated for Pressure drop across balls collecting strainers:

- The permissible limit of pressure drop across balls collecting strainers in clean condition shall be 0.15 MWC.
- If the pressure drops quoted are higher than above limit, the bids shall be technically loaded @ Rate as mentioned in Data Sheet-A for respective projects per **0.05 MWC** pressure drop across each balls collecting strainer.
- However no advantage shall be given for pressure drops quoted less than above permissible limit.
- The maximum acceptable limit for pressure drop across balls collecting strainer shall be (with technical loadings) 0.2 MWC.
  The bids will be technically rejected for pressure drops quoted higher than above maximum limit.
- The guaranteed pressure drops shall be demonstrated at site by bidder and if found higher shall be subject to LD @ twice the bid evaluation factor as above.

9.0 SPARES :

9.1 **Recommended Spares :**

The supply of spare parts as necessary recommended by the manufacture for three (3) years of reliable operation and maintenance of COLTCS of respective projects shall be supplied. List of such spares along with the unit price shall not be included in base price but indicated separately in the schedule of prices for recommended spares enclosed in Vol. -III.

9.2 **Mandatory Spares**

Mandatory Spares shall be as per Data Sheet-A or annexure enclosed with data sheet of the respective packages applicable for specific projects, prices for same shall be included by bidder in the equipment base price itself.

10.0 Quality Plan

Bidder shall submit QP in the event of order based on the guidelines given in the specification & QP enclosed therein. QP will be subject to BHEL/ Customer approval and customer hold points for inspection/ testing shall be marked in the QP at the contract stage. Inspection/ testing shall be witnessed as per same apart from review of various test certificates/ Inspection records etc. Charges for 3rd party inspection (TUV/ equivalent) for imported components wherever required shall be included by bidder in the base price itself. Witness for all the test identified under agency "C" & "N" in Quality plan shall be by third party.

If BHEL or BHEL customer decides to witness the tests along with third party, the cost of travel of BHEL or BHEL customer shall be borne by BHEL or BHEL customer themselves.

11.0 DELIVERY & DRAWINGS/ DOCUMENTS DISTRIBUTION SCHEDULE :

a. Delivery of Equipment for each project shall be as per NIT.

b. The drawings to be submitted by bidder in event of award of contract for COLTCS for each project shall be as follows:

- Technical Data Sheets, P&ID, Installation Plan , for COLTCS.
- GA drawings, Details of BR Skid and C& I Document(Part-I & II) of COLTCS as applicable.
- Quality Plan.
- O & M Manual.

c. Drawings submission schedule shall be as per NIT/as advised by Project Group.:

12.0 The makes of various bought out items shall be subjected to purchaser's approval in the event of order.

13.0 It is mandatory for the bidders to submit along with the bid the deviations if any whether major or minor in the schedule of deviations only. ***In the absence of deviations listed in the schedule of deviations the offer shall be deemed to be in full conformity with the specification "non-withstanding" any thing else stated elsewhere in bidder's offer, data sheets etc. The implied/ indirect deviations in data sheets etc. Shall not be binding on the purchaser.***

14.0 The following documents shall be furnished by the bidder with his offer :

- Compliance certificate duly signed and stamped (Enclosed at Schedules).
- Guarantee schedule duly signed and stamped (Enclosed at Schedules).

- GA drawings of following with empty/ filled-ups.
  - Balls Collecting Strainers (as applicable).
  - Balls recirculating Skids.
  - Debris Flushing pumps (if applicable)
  - Other equipments considered necessary for Layout/ Civil.

- Electrical Load Data (Enclosed at Vol. III of Specification)
- Schedule of Deviation (Enclosed at Schedules).

The bidder to note that load requirement furnished and finalised during tender stage shall only be provided by BHEL and any changes or additional requirement of Electrical load by bidder during contract stage shall be provided by BHEL with cost repercussions to the bidder.

NOTE: Apart from above, no other drawing/ document/ data sheet etc. shall be submitted along with the offer. If any drawing/ document etc. is submitted with the offer, same shall be considered as for 'Reference' purpose only and shall not be reviewed/ commented upon and any deviation, exclusion to scope, etc. taken in documents but not highlighted in the deviation schedule shall not be taken cognizance of.

ANNEXURE- I

COLTCS

SL.NO.	Projects	Size (NB)	Length of Ball Seperator (Including Counter Flange)	Scope of Counter Flange	Scope of nuts and bolts.
1	**2x660 MW DVC RAGHUNATHPUR TPP PHASE II -STG**	2300 NB	4200 mm	In Purchaser's Scope.	In Bidder's Scope

FIRST ANGLE PROJECTION

ALL DIMENSIONS ARE IN MM

DRAWING NO. PE-DG-999-141-M017

ANNEXURE-II

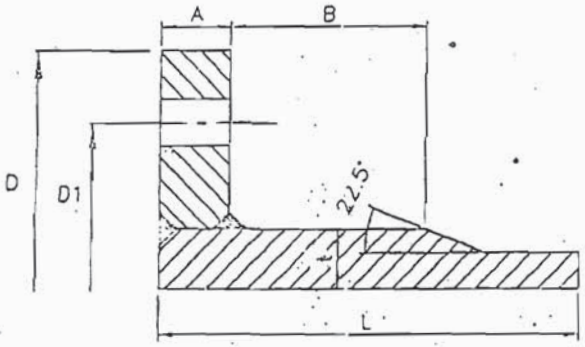

NOTES:-

Flange thicknesses listed are for Design pressure=5Kg/cm²(g) and Flange dimensions as given in the table. Final thickness of the flange is to be checked for actual OD/Bolting PCD/Neck dimensions.

PIPE SIZE	PIPE THK.	FLANGE OD 'D'	Bolt PCD 'D1'	WELD NECK FLANGE				SLIP-ON FLANGE THICKNESS
				FLANGE THK. 'A'	NECK THK. 't'	NECK Length 'D'	Appx. Total Length 'L'	
1200	10-12	1465	1380	40	24	70	200	90
1400	14	1675	1590	50	24	70	200	100
1600	14	1915	1920	60	32	80	220	110
1800	14-16	2115	2020	70	32	90	250	120
2200	18	2550	2420	80	36	100	300	140
2300	20			90	38	110	325	150
2500	20			90	38	110	325	150
2700	20			90	38	110	325	150

DRAWING FOR BALL SEPARATOR COUNTER FLANGE

REV.	DATE	ALTD	CHD	APPD

JOB NO. 999

STATUS -

DISTRIBUTION

BHARAT HEAVY ELECTRICALS LTD
POWER GROUP
PROJECTS ENGINEERING MANAGEMENT
PPEI, NOIDA

DEPT CODE		NAME	SIGN	DATE
	DRN	PM		25.06.07
	DSGN	PM		25.06.07
	CHD	SPV		25.06.07
	APPD	SM		25.06.07

TITLE

COUNTER FLANGE DETAILS

DRAWING NO. PE-DG-999-141-M017

SHEET 01 OF 01

REV 00

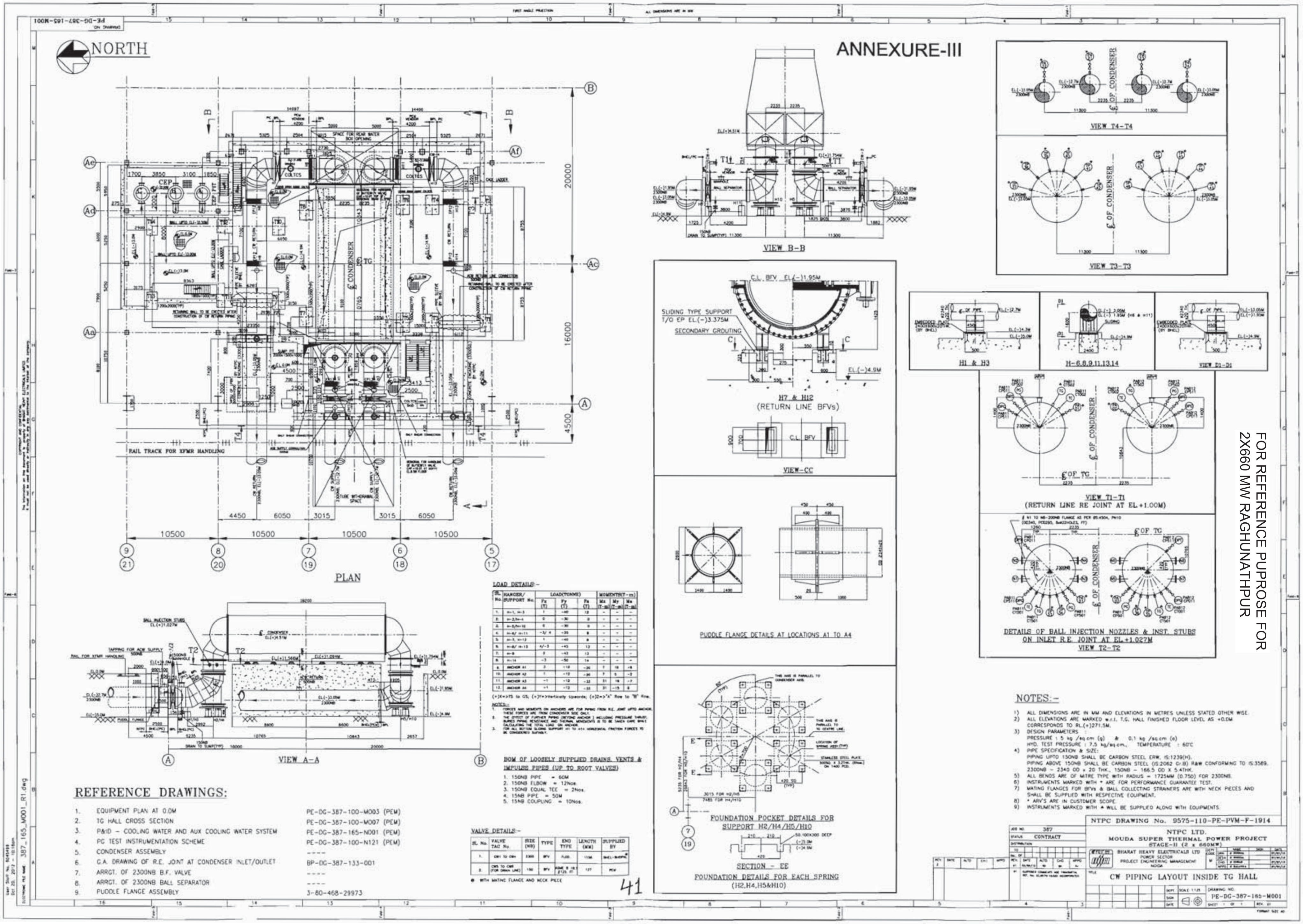
FOR REFERENCE PUPROSE FOR
2X660 MW RAGHUNATHPUR
ANNEXURE-III
NORTH
PLAN
RAIL TRACK FOR XFMR HANDLING
VIEW B-B
VIEW A-A
VIEW T4-T4
VIEW T3-T3
H1 & H3
H-6,8,9,11,13,14
VIEW D1-D1
C.L. BFV EL.(-)1.95M
SLIDING TYPE SUPPORT
T/O EP EL.(-)3.375M
SECONDARY GROUTING
EL.(-)4.9M
H7 & H12
(RETURN LINE BFVs)
VIEW-CC
VIEW T1-T1
(RETURN LINE RE JOINT AT EL.+1.00M)
PUDDLE FLANGE DETAILS AT LOCATIONS A1 TO A4
DETAILS OF BALL INJECTION NOZZLES & INST. STUBS
ON INLET R.E. JOINT AT EL.+1.027M
VIEW T2-T2
FOUNDATION POCKET DETAILS FOR
SUPPORT H2/H4/H5/H10
SECTION - EE
FOUNDATION DETAILS FOR EACH SPRING
(H2,H4,H5&H10)
LOAD DETAILS:-
BOM OF LOOSELY SUPPLIED DRAINS, VENTS &
IMPULSE PIPES (UP TO ROOT VALVES)
1. 150NB PIPE = 60M
2. 150NB ELBOW = 12Nos.
3. 150NB EQUAL TEE = 2Nos.
4. 15NB PIPE = 50M
5. 15NB COUPLING = 10Nos.
VALVE DETAILS:-
REFERENCE DRAWINGS:
1. EQUIPMENT PLAN AT 0.0M PE-DG-387-100-M003 (PEM)
2. TG HALL CROSS SECTION PE-DG-387-100-M007 (PEM)
3. P&ID - COOLING WATER AND AUX COOLING WATER SYSTEM PE-DG-387-165-N001 (PEM)
4. PG TEST INSTRUMENTATION SCHEME PE-DG-387-100-N121 (PEM)
5. CONDENSER ASSEMBLY ----
6. G.A. DRAWING OF R.E. JOINT AT CONDENSER INLET/OUTLET BP-DG-387-133-001
7. ARRGT. OF 2300NB B.F. VALVE ----
8. ARRGT. OF 2300NB BALL SEPARATOR ----
9. PUDDLE FLANGE ASSEMBLY 3-80-468-29973
NOTES:-
1) ALL DIMENSIONS ARE IN MM AND ELEVATIONS IN METRES UNLESS STATED OTHER WISE.
2) ALL ELEVATIONS ARE MARKED w.r.t. T.G. HALL FINISHED FLOOR LEVEL AS +0.0M CORRESPONDS TO RL.(+)271.5M.
3) DESIGN PARAMETERS :
PRESSURE : 5 kg /sq.cm (g) & 0.1 kg /sq.cm (a)
HYD. TEST PRESSURE : 7.5 kg/sq.cm., TEMPERATURE : 60°C
4) PIPE SPECIFICATION & SIZE:
PIPING UPTO 150NB SHALL BE CARBON STEEL ERW, IS:1239(H).
PIPING ABOVE 150NB SHALL BE CARBON STEEL (IS:2062 Gr.B) R&W CONFORMING TO IS:3589.
2300NB - 2340 OD x 20 THK., 150NB - 168.5 OD X 5.4THK.
5) ALL BENDS ARE OF MITRE TYPE WITH RADIUS = 1725MM (0.75D) FOR 2300NB.
6) INSTRUMENTS MARKED WITH * ARE FOR PERFORMANCE GUARANTEE TEST.
7) MATING FLANGES FOR BFVs & BALL COLLECTING STRAINERS ARE WITH NECK PIECES AND SHALL BE SUPPLIED WITH RESPECTIVE EQUIPMENT.
8) * ARV'S ARE IN CUSTOMER SCOPE.
9) INSTRUMENTS MARKED WITH ▲ WILL BE SUPPLIED ALONG WITH EQUIPMENTS.
NTPC DRAWING No. 9575-110-PE-PVM-F-1914
JOB NO. 387
STATUS CONTRACT
NTPC LTD.
MOUDA SUPER THERMAL POWER PROJECT
STAGE-II (2 x 660MW)
BHARAT HEAVY ELECTRICALS LTD
POWER SECTOR
PROJECT ENGINEERING MANAGEMENT
NOIDA
CW PIPING LAYOUT INSIDE TG HALL
DRAWING NO.
PE-DG-387-165-M001
387_165_M001_R1.dwg
41

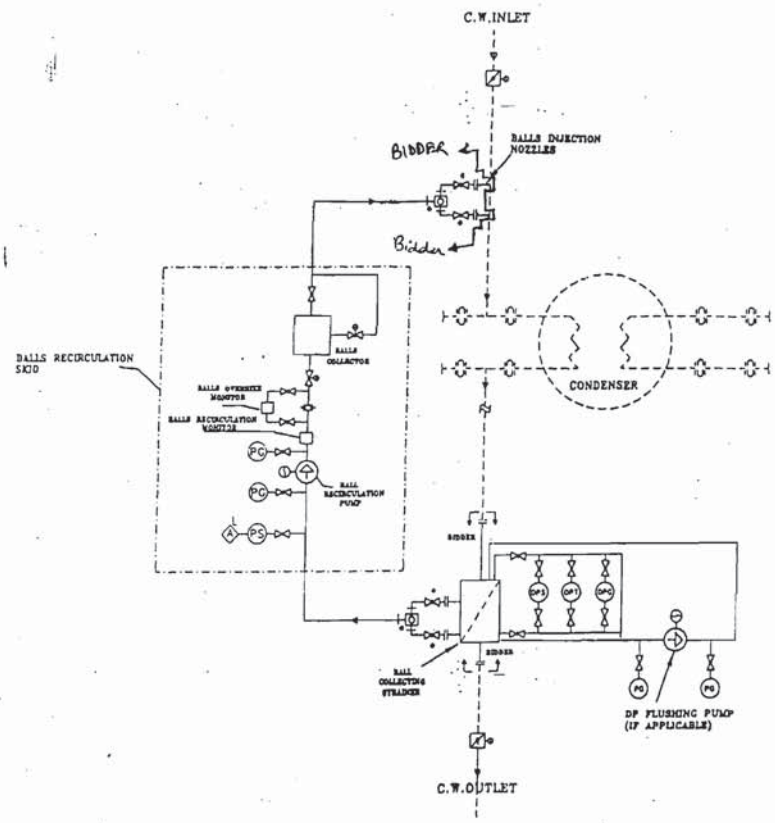

NOTE:-

1. SCHEMATIC SHOWN IS TYPICAL FOR ONE HALF OF CONDENSER. SHALL BE IDENTICAL FOR THE CONDENSER SECOND HALF.

2. BIDDER'S SCOPE OF SUPPLY INCLUDES :
   a) BALL RECIRCULATING SKID COMPLETE WITH BALLS COLLECTOR, BOM, BRM, VALVES, INSTRUMENTS ETC.
   b) COUNTERFLANGES FOR BALL SEPARATORS.
   c) INJECTION NOZZLES WITH FLANGES/ COUNTER FLANGES.
   d) ALL VALVES IN COTCS (*) INCLUDING THEIR COUNTERFLANGES, NUTS, BOLTS, GASKETS.
   e) COUNTERFLANGES WITH NUTS, BOLTS & GASKETS FOR ALL TERMINAL POINTS.
   f) SIGHT FLOW INDICATORS (*) OR ANY OTHER SPECIAL FITTING/EQUIPMENT COMING ON COTCS PIPEWORK.

3. SCOPE OF SUPPLY

PURCHSER'S | BIDDER'S

TYPICAL FLOW DIAGRAM FOR ON LOAD TUBE CLEANING SYSTEM

SECTION C2

CONDENSER ONLOAD TUBE CLEANING SYSTEMS

ELECTRICAL DETAILS

ANNEXURE – I TO SECTION – C : STANDARD ELECTRICAL SCOPE BETWEEN BHEL/NTPC AND VENDOR

PACKAGE : COLTCS

S.NO	DETAILS	SCOPE SUPPLY	SCOPE E&C	REMARKS
1	415V MCC	BHEL/NTPC	BHEL/NTPC	1. 415 V AC/240 V AC supply shall be provided by BHEL/NTPC based on load data provided by vendor at contract stage for all equipment supplied by vendor as part of contract including power supply equipment (battery charger etc) required for the PLC/control panel (as applicable) for the system supplied by vendor. 2. Interposing relays (RE 302 of Jyoti make or equivalent), if required for PLC and microprocessor based systems, shall be provided by BHEL/NTPC in MCCs. Requirement of these relays shall be furnished by vendor during detailed engineering stage.
2	Local Push Button Station (for motors)	Vendor	Vendor	Located near the motor.
3	Power cables, control cables and screened control cables for a) both end equipment in BHEL/NTPC's scope b) both end equipment in vendor's scope c) one end equipment in vendor's scope	 BHEL/NTPC Vendor BHEL /NTPC	 BHEL/NTPC BHEL/NTPC BHEL/NTPC	1. Sizes and quantity of cables required shall be informed by vendor at contract stage (based on inputs provided by BHEL/NTPC). Finalisation of cable sizes shall be done by BHEL/NTPC. Vendor shall provide lugs & glands accordingly. 2. Laying of cables by BHEL/NTPC. 3. Termination at BHEL/NTPC equipment terminals by BHEL/NTPC. 4. Termination at Vendor equipment terminals by Vendor.
4	Any special type of cable like compensating, co-axial, prefab, MICC, fibre optical etc.	Vendor	Vendor	
5	Cable trays, accessories & cable trays supporting system	BHEL/NTPC	BHEL/NTPC	
6	Cable glands and lugs for equipments supplied by Vendor	Vendor	Vendor	1. Double compression Ni-Cr plated brass cable glands 2. Solder less crimping type heavy duty tinned copper lugs for power cables 3. Solder less crimping type heavy duty copper lugs for control cables.
7	Conduit and conduit accessories for cabling between equipments supplied by vendor	Vendor	Vendor	Conduits shall be medium duty, hot dip galvanised cold rolled mild steel rigid conduit as per IS: 9537. Makes of conduits shall be subject to

ANNEXURE – I TO SECTION – C : STANDARD ELECTRICAL SCOPE BETWEEN BHEL/NTPC AND VENDOR

PACKAGE : COLTCS

S.NO	DETAILS	SCOPE SUPPLY	SCOPE E&C	REMARKS
				customer/ BHEL/NTPC approval at contract stage.
8	Lighting	BHEL/NTPC	BHEL/NTPC	
9	Equipment grounding & lightning protection	BHEL/NTPC	BHEL/NTPC	
10	Below grade grounding	BHEL/NTPC	BHEL/NTPC	
11	LT Motors with base plate and foundation hardware	Vendor	Vendor	Makes shall be subject to customer/ BHEL/NTPC approval at contract stage.
12	Mandatory spares	Vendor	-	Vendor to quote as per specification.
13	Recommended O & M spares, E & C spares, erection & maintenance tools & tackle.	Vendor	-	As per specification
14	Any other equipment/material/service required for completeness of system but not specified above (to ensure trouble free and efficient operation of the system).	Vendor	Vendor	
15	a) Input cable schedules (C & I) b) Cable interconnection details for above c) Cable block diagram	Vendor Vendor Vendor	- - -	Cable listing for C & I systems for vendor supplied equipment shall be furnished during detail engineering by vendor in soft copies in the BHEL/NTPC cable schedule format.
16	Equipment layout drawings	Vendor	-	For ensuring cabling requirements are met, vendor shall furnish layout drawings (both in print form as well as in AUTOCAD) of the complete plant (including electrical area) indicating location and identification of all equipments requiring cabling, and shall incorporate cable trays routing details marked on the drawing as per PEM interface comments. Electrical equipment layout drawing shall be to BHEL/NTPC approval.
17	Electrical Equipment GA drawing	Vendor	-	For necessary interface review.

NOTES:

1. Make of all electrical equipments/items supplied shall be reputed make & shall be subject to approval of BHEL/NTPC/customer after award of contract.
2. All QPs shall be subject to approval of BHEL/NTPC/customer after award of contract without any commercial implication.
3. For skid mounted system, 2 nos. (1W+1S) supply of 415 V, 3 phase AC shall be provided by BHEL/NTPC. Complete electrical distribution for the skid including changeover between feeder/starters/LCP/inter-locks/protection devices / any other supply etc. shall be in bidder's scope.

	TITLE	SPECIFICATION NO.
BHEL	**LV MOTORS**	VOLUME II B
	DATA SHEET-A	SECTION D
		REV NO. DATE
		SHEET 1 OF 1

1.0	Design ambient temperature	:	50 °C
2.0	Maximum acceptable kW rating of LV motor	:	Below 200KW
3.0	Installation (Indoors/ Outdoors)	:	As required
4.0	Details of supply system		
	a) Rated voltage (with variation)	:	415V ± 10%
	b) Rated frequency (withvariation)	:	50 Hz +3 to -5%
	c) Combined voltage & freq. variation	:	10% (sum of absolute values)
	d) System fault level at rated voltage	:	45 kA RMS for 1 sec
	e) Short time rating for terminal boxes		
	o 110 kW and above (Breaker controlled)	:	45 KA for 0.20 sec.
	o Below 110 kW(Contactor controlled)	:	45 KA protected by fuse
	f) LV System grounding	:	Solidly
5.0	Class of insulation	:	Class 'F', with temp rise limited to class B.
6.0	Minimum voltage for starting (As percentage of rated voltage)	:	85% of rated voltage
7.0	Power cables data	:	Shall be given during Detailedengg
8.0	Earth Conductor Size & Material	:	Shall be given during Detailedengg
9.0	Space heater supply	:	240 V, 1¢ , 50 Hz
10.0	Rating up to which Single phase motor	:	Acceptable below 0.20 kW

11.0 The ratio of locked rotor KVA at rated voltage to rated KW shall not exceed thefollowing (Without any further tolerance) : As per clause no. 7.16 of technical spec sec-VI part-B (page 5 of 8)

12.0	Additional tests	:	As per QP
12.1	Flame-proof motor		
	a) Enclosure suitable (As per IS:2148)	:	As per requirement
	b) Classification of Hazardous area (As per IS: 5572 part-I)	:	As per requirement
12.0	Makes	:	As per customer approved vendors

1.0 **EQUIPMENT & SERVICES TO BE PROVIDED BY BIDDER :**

a) Services and equipment as per "Electrical Scope between BHEL and Vendor".
b) Any item/work either supply of equipment or erection material which have not been specifically mentioned but are necessary to complete the work for trouble free and efficient operation of the plant shall be deemed to be included within the scope of this specification. The same shall be provided by the bidder without any extra charge.
c) Supply of mandatory spares as specified in the specifications of mechanical equipments.
d) Erection and Commissioning spares.
e) Erection & Maintenance tools & tackles.
f) Electrical load requirement for COLTCS.
g) All equipment shall be suitable for the power supply fault levels and other climatic conditions mentioned in the enclosed project information.
h) Bidder to furnish list of makes for each equipment at contract stage, which shall be subject to customer /BHEL approval without any commercial and delivery implications to BHEL
i) Various drawings, data sheets as per required format, Quality plans, calculations, test reports, test certificates, operation and maintenance manuals etc shall be furnished as specified at contract stage. All documents shall be subject to customer/BHEL approval without any commercial implication to BHEL.

2.0 EQUIPMENT & SERVICES TO BE PROVIDED BY PURCHASER FOR ELECTRICAL & TERMINAL POINTS:
Refer "Electrical Scope between BHEL and Vendor".

3.0 DOCUMENTS TO BE SUBMITTED ALONG WITH BID

3.1 Bidder shall confirm total compliance to the electrical specification without any deviation from the technical/quality assurance requirements stipulated. In line with this two signed and stamped copies of the following shall be furnished by the bidder as technical offer:

a) A copy of this sheet "Electrical equipment Specification for "COLTCS" and sheet "Electrical Scope between BHEL and Vendor" with bidder's signature and company stamp.
b) List of Erection and Commissioning spares.
c) List of Erection & Maintenance tools & tackles.
d) Electrical load requirement

3.2 No technical submittal such as copies of data sheets, drawings, write-up, quality plans, type test certificates, technical literature, etc, is required during tender stage. Any such submission even if made, shall not be considered as part of offer.

4.0 List of enclosures :
a) Specification AC/DC Motors
b) Data sheet of AC/DC Motors.
c) Quality Plan.
d) Load data format.

SECTION C3

CONDENSER ONLOAD TUBE CLEANING SYSTEMS

C&I DETAILS

SPECIFIC C&I TECHNICAL REQUIREMENT FOR COLTCS

Sl.No.		2X660 MW RAGHUNATHPUR
1.00	SYSTEM	COLTCS
2.00	COMMON / PER UNIT	PER UNIT
3.00	CONTROL SYSTEM	DCS (TG C&I)
3.10	PROCESSOR CONFIGURATION FOR PLC SYSTEM	NA
4.00	LOCATION OF CONTROL SYSTEM	CCR
4.10	CONTROL SYSTEM SCOPE (BIDDER/ BHEL/ CUSTOMER)	BHEL
5.00	HARDWIRED INTERFACE WITH DCS (Y/N)	NA
5.10	PURPOSE OF HARDWIRED INTERFACE WITH DCS	
5.11	a) COMMAND FROM DCS (Y/N)	NA
5.12	b) STATUS FEEDBACK TO DCS (Y/N)	NA
5.13	c) GROUP FAULT ALARM TO DCS (Y/N)	NA
6.00	SOFTLINK TO DCS (Y/N)	NA
6.10	PURPOSE OF SOFTLINK TO DCS	
6.11	a) COMMAND INTERFACE WITH DCS (Y/N)	NA
6.12	b) STATUS MONITORING IN DCS (Y/N)	NA
7.00	PROTECTION CLASS FOR PLC / RIO PANEL	NA
8.00	CONTROL FROM PB's ON LCP/OWS ON LCP	NA
9.00	ANNUNCIATION ON LCP (Y/N) – IF Y, MIN NO. OF HARDWIRED ALARMS / INDICATIONS	NA
9.10	MIMIC ON LCP (Y/N)	NA
10.00	CONTROL FROM DCS IN CCR (Y/N)	Y
11.00	TYPE OF SOFTLINK (TP/OFC)	NA
11.10	COMMUNICATION CABLE SCOPE (BIDDER/ PEM/ EDN/ CUSTOMER)	NA
11.20	REDUNDANT CABLE (Y/N)	NA
11.30	PROTOCOL	NA
12.00	RIO / RPU (Y/N)	NA
13.00	## NO. OF OWS / LAPTOP	NA
13.10	SIZE OF OWS/ CRT OR LCD	NA
14.00	NO. OF PRINTER	NA
14.10	PRINTER SIZE AND TYPE	NA
15.00	$$ POWER SUPPLY AVAILABLE FOR BALL MONITOR (24V DC / 110 V AC UPS / 230 V AC UPS)	24V DC

15.10	**&& POWER SUPPLY AVAILABLE FOR PLC PANEL (3PHASE, 415 V AC/ 1PHASE, 110 V UPS/ 1PHASE, 230 V UPS)**	NA
15.20	**REDUNDANT FEEDERS (R) / NON-REDUNDANT (NR) FEEDERS FOR POWER SUPPLY**	NA
15.30	**UPS BATTERY CONFIGURATION (1X100% / 2X100%)**	NA
15.40	**BATTERY TYPE (LEAD ACID/ Ni-Cd)**	NA
15.50	**BATTERY BACK-UP TIME (in minutes)**	NA
16.00	**ACTUATOR WITH INTEGRAL STARTER (Y/N)**	Y
17.00	**PG/ DPG/ PS/ DPS/ PT/ DPT per Balls Collecting Strainer**	DPT = 2 nos. DPG = 1 no.
19.00	**REMARKS**	
20.00	**PROJECT SPECIFIC INFO**	

NOTES:

1. $$ THIS IS APPLICABLE FOR DCS CONTROLLED SYSTEMS ONLY.

2. IN CASE OF DCS CONTROLLED SYSTEMS, BIDDER TO TERMINATE ALL INSTRUMENTATION AND CONTROL ELEMENTS IN JUNCTION BOXES FOR FURTHER CABLING TO DCS BY BHEL/CUSTOMER. BIDDER TO PROVIDE INPUT/OUTPUT LIST, DRIVES LIST, JUNCTION BOX SCHEDULE AND TERMINATION DETAILS, RECOMMENDED CONTROL LOGICS / WRITE-UP ETC. DURING DETAILED ENGINEERING

3. FOR THE PROJECTS IN WHICH CONTROL ARE ENVISAGED WITH DCS CONTROL SYSTEM FOR COLTCS- 2 SETS OF COLTCS/ SHALL HAVE ONE COMMON STARTER PANEL (SWITCH GEAR PANEL).

4. INSTRUMENT RACK AND JUNCTION BOXES SHALL BE IN BIDDER'S SCOPE OF SUPPLY.

5. BIDDER TO FURNISH ELECTRICAL LOAD DATA DURING DETAILED ENGINEERING.

6. ALARM FACIA SHALL BE UNDER BIDDER'S SCOPE. NO. OF FACIA SHALL BE DECIDED DURING DETAILED ENGINEERING.

LEGEND:

DCS- DISTRIBUTED CONTROL SYSTEM
PLC- PROGRAMMABLE LOGIC CONTROLLER
RPU - REMOTE PROCESSING UNIT

STANDARD BLOCK DIAGRAM FOR COLTCS PACKAGE WITH DCS CONTROL

CONFIGURATION A:
WITH STARTER PANEL IN VENDOR SCOPE

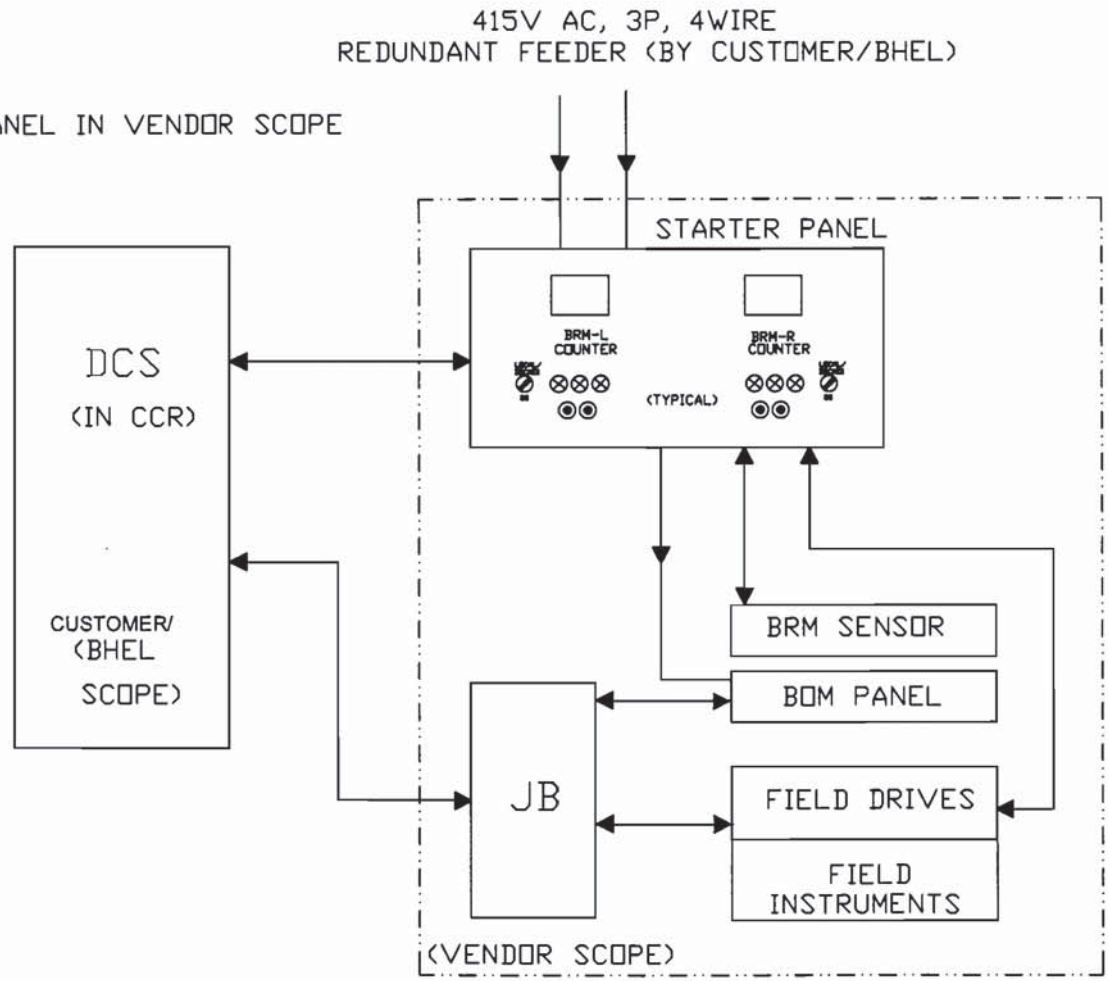

PE-DG-999-145-I274A(a)

SECTION – D

STANDARD TECHNICAL SPECIFICATION

SECTION D1 : CONDENSER ONLOAD TUBE CLEANING SYSTEM

SECTION D2 : ELECTRICAL SYSTEMS

SECTION D3 : C&I SYSTEM

SECTION D1

STANDARD TECHNICAL SPECIFICATION FOR CONDENSER ONLOAD TUBE CLEANING SYSTEMS

1.00.00 **GENERAL**

This specification covers the design, performance and operational requirements, configuration and constructional features, manufacture, assembly, inspection and testing at the manufacturer's and/or his sub-contractor's works and painting for delivery of condenser on-load tube cleaning system (sponge rubber balls type) complete with all accessories as specified hereinafter. Each half of the condenser shall be provided with an independent tube cleaning system.

2.00.00 **CODES AND STANDARDS**

2.01.00 The design, materials, manufacture, inspection and testing of the condenser on-load tube cleaning system complete with all accessories, shall comply with the requirements of the latest versions of the following appropriate codes and standards.

2.01.01 IS/BS/DIN/US Standards regarding pressure vessels, pumps, piping, flanges and others as necessary.

2.01.02 IS/BS/DIN/ASTM Standards for materials specification and testing procedures.

2.01.03 IS/BS/DIN/AWWA Standards for valves and the testing.

2.02.00 In case of any conflict between the above codes/standards and this specification, the later shall prevail and in case of any further conflict in the matter, the interpretation of the specification by the Engineer shall be final and binding.

3.00.00 **DESIGN AND CONSTRUCTION**

3.01.00 General Requirements

3.01.01 Unless otherwise necessary, manufacturer's standard and proven models of the tube cleaning system shall be supplied.

3.01.02 The tube cleaning system shall be capable of safe, continuous and trouble-free operation for removal of fouling and scaling materials from condenser tubes. Vibration, noise, mechanical stresses shall be kept within allowable limits specified by relevant codes/standards. In design, due attention shall be given to ease of maintenance, repair and cleaning.

3.01.03 Suitable Corrosion allowance shall be provided whenever necessary. Adequate provision for future installation of cathodic protection shall be provided.

3.01.04 The tube cleaning system shall consist of ball separator at condenser outlet, recirculating pump, ball collector, differential pressure measuring system for ball separator, ball monitoring system, cleaning balls, piping valves, distributors, injection nozzles, instrumentations, control panel, interconnecting cables and others as necessary. The configuration of the tube cleaning system shall be as described in section C and / or as per the scheme enclosed.

3.02.00 **Performance Requirements.**

3.02.01 The tube cleaning system with all accessories shall be designed and guaranteed to meet the following requirements :

The tube cleaning system shall perform satisfactorily under the flow and pressure drop conditions (in the condenser) specified in Data Sheet - A and shall be capable of removing the various forms of fouling and scaling from condenser tubes.

3.02.02 The ball separator at the condenser outlet, shall be designed such that the pressure drop across the ball separator under clean conditions shall not be more than that specified in Data Sheet - A. The performance of the ball separator shall be continuous with minimum number of backwashing operations.

3.02.03 The power consumption by ball recirculation pump during various operations shall be minimum possible.

The quantity of cleaning balls worn out and / or lost, shall be minimum possible.

3.03.00 **Operational Requirements.**

The tube cleaning system and other accessories shall be designed for the following operation modes :

3.03.01 Complete automatic start-up of tube cleaning system initiated by pressing the push button (manual command).

3.03.02 Complete automatic shut-down of tube cleaning system with ball collection, effected by the following :

- Push button (manual command).
- Adjustable timer (after a defined cleaning period).
- Ball monitoring system (when the number of oversized balls falls below a set value).

3.03.02 Complete automatic backwashing of ball separator with ball collection, effected by the following :

- Differential pressure measuring system at a pre-determined differential across the ball separating strainer/ screen.
- Adjustable timer
- Push button

3.03.04 Complete automatic emergency backwashing of ball separator with alarm indication, effected by differential pressure measuring system.

3.03.05 Manual operation for start-up, shut-down with ball collection backwashing of ball separator, flushing of differential pressure measuring system etc., in case of failure of control system.

3..04.00 **Ball Separator**

3.04.01 Ball separator body shall be of rigid construction and shall be designed and manufactured as per the applicable codes for pressure vessels. It shall house the ball separating screen / strainer and shall have flanged inlet, outlet, ball extraction opening and pressure measuring tappings etc. Body shall be designed and manufactured as per the applicable codes for pressure vessels and to take care of forces and moments as enclosed in the specification. However in no case thickness of housing/body shall be less than the connecting pipe thickness as specified in data sheet A

3.04.02 The ball separator shall be provided with manhole with bolted cover and sight glass to observe its internals.

3.04.03 If specified in Data Sheet -A, ball separator body shall be Epoxy lined.

3.04.04 The ball seperating screen / strainer shall be designed for the maximum differential pressure across the separator and shall be securely mounted in the body. Screen / strainer shaft shall be sized adequately considering the overloading of screens / strainer due to debris accumulation.

3.04.05 The ball separating strainers / screens shall have electric actuators for swivelling to allow for their backwashing. Also suitable handwheels shall be provided to enable manual swivelling of strainers / screens.

3.05.00 **Ball Recirculating Pump**

3.05.01 The ball recirculating pump shall be horizontal centrifugal type. The casing shall be designed to withstand 1.5 times the shut-off pressure or twice the operating pressure, whichever is higher.

3.05.02 The impeller shall be non-clog type and shall be contoured suitably to avoid damage to the cleaning balls. The impeller shall be secured suitably to the shaft and shall be retained against circumferential movement by keys, pins or lock rings. Loctite compound shall be applied after tightening of locknuts to prevent dislocation of impeller.

3.05.03 Replaceable type wearing ring shall be provided to prevent damage to the casing and impeller.

3.05.04 Pumps shall be provided with mechanical seals to the extent feasible. If Gland packing is provided it should be of good quality to be provided to prevent leakage of water from pump glands.

3.05.05 Shaft size selected shall take into Consideration the critical speed which shall be away from the operating speed as recommended in applicable codes / standards. Renewable type fine finished shaft sleeves shall be integral with water thrower plates at the end and the length must extend beyond the outer faces of gland packing so as to distinguish between the leakage between shaft and the shaft sleeve and that past the seals / glands.

3.05.06 Bearings of adequate design shall be provided for taking the entire pump load arising from all probable conditions of continuous operation through its range of operation. The bearings shall be designed on the basis of 20,000 working hours minimum for the load corresponding to the duty point. Proper lubricating element does not contaminate the liquid being pumped. Bearings shall be easily accessible without disturbing the pump assembly

3.05.07 Stuffing box of suitable design to permit replacement of packing without removing any part other than the gland shall be provided. The stuffing boxes shall be sealed / cooled by the fluid being pumped.

3.05.08 Pumps shall be of self-lubricated, self - sealed and self-cooled type. All pipework, fitters etc., for sealing, cooling and lubricating purpose shall be supplied and no external cooling/lubricating/sealing water will be supplied. Pump capacity shall take into account the cooling/lubricating/sealing water requirement.

3.05.09 All rotating components shall be statically and dynamically balanced.

3.05.10 The pump shall be designed such that pump impellers and other accessories of the pump, are not damaged due to flow reversal.

3.05.11 The pump shall be capable of developing the required total head at rated capacity for continuous operation. Also the pumps shall be capable of being operated to give satisfactory performance at any point on the head Vs. flow characteristic curve over a range or 40% of rated flow to 120 -130 % of rated flow.

3.05.12 The pump shall preferably be non-overloading type. The total head Vs. capacity curve shall be continuously rising from the maximum flow point towards shut-off without any zone of instability.

3.05.13 The pump shall run smoothly without undue noise and vibration. Peak to peak vibration limits and noise level shall be within the acceptable values of applicable codes/standards.

3.05.14 The pump and motor shafts shall be connected through a pin and rubber bush flexible type of couplings. Suitable coupling guards shall be provided for the couplings.

3.05.15 The pump shall be capable of being started with discharge valve fully opened. Motor rating shall be adequate for this condition. The output KW rating of the pump drive motor shall not be less than the larger of the following :

a) Maximum power input to the pump over the entire range for maximum flow to shut-off condition.
b) 125% of power input to the pump at duty point corresponding to 103% of the rated speed.

3.06.00 **Ball Collector**

3.06.01 The body of the ball collector shall be designed to withstand 2.0 times the operating pressure or 1.5 times the recirculating pump shut-off pressure, whichever is higher.

The ball collector shall be designed and manufactured as per the applicable codes for pressure vessels.

3.06.02 Ball collector shall be provided with an inspection window/sight glass for visual inspection of the cleaning balls.

3.06.03 Ball collector shall be provided with suitable ports with covers for ball feeding and removal.

3.06.04 The ball collector shall be provided with vent and drain connections with isolating valves.

3.06.05 Provision shall be made in the ball collector for separating the undersized balls and ball collector shall have a separate chamber for collecting the undersized balls.

3.06.06 If specified in Data Sheet -A, ball collector body shall be lined with suitable resilient material.

3.06.07 The differential pressure measuring system shall be provided with D.P. transmitter ,DPS & DPGof remote seal arrangement.

3.07.00 **Differential Pressure Measuring System**

3.07.01 The ball separator shall be provided with a measuring system for differential pressure across the ball separating strainer/screen, to check debris accumulation and to initiate ball catching and backwashing operations. This shall consist of a differential pressure switch/transmitter for automatic backwashing operation, a differential pressure guage for manual observation with adequate number of tappings with isolating valves.

3.07.02 The contacts for differential pressure switch/transmitter and for differential pressure guage shall be independent, so that in the event of failure of one, the other is available.

3.07.03 The differential pressure measuring system shall be with remote seal arrangement .

3.08.00 **Ball Monitoring System**

3.08.01 Ball monitoring system shall be provided for continuously monitoring the quantity and size of the cleaning balls in circulation. The monitoring system shall perform the following functions :

a) Continuously counting the oversize balls in circulation and giving an alarm calling for investigation of ball losses, when the number of oversize circulating balls falls below a set valve.

b) Continuously measuring the size of the balls in circulation and initiating the shut-down of the tube cleaning system with alarm calling-for replacement of balls when the number of oversized balls falls below a set valve.

c) Bidder's if not manufacturing ball oversized monitor,can supply automatic ball sorter in lieu of same for automatic sorting of the undersized balls.

3.08.02 The monitoring system shall be of proven and reliable design and shall be complete with necessary transducers, amplifiers, transmission lines, power cables and electronic processor etc.

3.08.03 The electronic processor of the ball monitoring system shall be housed in the control panel and shall consist the following : -

a) Indicators for
- required basic ball charge.
- recirculating ball quantity.
- oversized ball quantity.

b) Time counters for
- total cleaning system operating hours.
- cleaning system operating hours with sufficient number of oversized balls.

c) Recorder for ball consumption.

3.08.04 The ball monitoring system shall have provisions for self-testing and self-calibration.

3.09.00 **Cleaning Balls**

3.09.01 The sponge rubber cleaning balls shall be slightly oversized to the internal diameter of condenser tubes and should be able to remove all fouling and scaling deposits in the condenser tubes.

3.09.02 The specific gravity of the cleaning balls shall be such that good distribution of balls across the tube sheet and cleaning of all tubes are ensured.

3.09.03 The composition of the cleaning balls shall be based on natural rubber and shall be suitable for temperature upto 100°C. Hardness of the cleaning balls shall be compatible to tube material and corrosion/fouling behaviour. If cleaning balls consist of abrasive coated balls, the abrasive material shall also be compatible for use with the tube material.

3.09.04 Calculations and basis for selection of cleaning balls circulation quantity, type, size, hardness, cleaning frequency etc., shall be furnished during contract stage.

3.10.00 **Piping, Valves, Distributors and Injection Nozzles.**

3.10.01 Interconnecting piping, valves, injection nozzles and other fittings shall be designed to withstand 2.0 times the operating pressure or 1.5 times the pump shut-off pressure whichever is higher.

3.10.02 Interconnecting piping shall be sized and routed optimally. Velocity in the pipe work shall be less than 1.5 m/s for pump suction and less than 2.2 m/s in other pipe work.

3.10.03 Necessary isolation valves, vent and drain valves for various equipments shall be provided. Valves shall conform to appropriate standards. Valves provided in ball transport piping shall be ball type. Gland packing of all valve shall be of superior quality to avoid leakage. All valves upto 150 Nb shall be ball valves. For higher sizes ,

gate / globe /B.F. valves shall be provided. All instrument valves shall be needle valves.

3,10.04 Adequate number of ball injection nozzles shall be provided for proper distribution of cleaning balls in condenser inlet. Ball injection nozzles shall be flanged type and shall have two sets of flanges, one for connecting to ball transport pipe and other for connecting to the stub on condenser inlet pipe for ease of removal during repairs or checking.

3.10.05 Distributors (if applicable) with sight glass shall be provided wherever ball transport piping branching out or joining together for proper guidance of cleaning balls.

3.10.6 Type of valves shall be ball valves, no diaphragm type valve shall be used.

3.11.00 **Actuators**

3.11.00 Tube cleaning system shall be provided with actuators wherever necessary for various automatic operations. The actuators shall be electric motor operated and shall meet the requirements of the enclosed specification. The actuator shall be provided with auxiliary handwheel for manual operation in the event of control system failure.

3.12.00 **Electric Motors**

The drive motors for recirculating pump and differential pressure measuring system flushing pump shall conform to the requirements of the enclosed specification.

3.13.00 **Instrumentation and Control System.**

3.13.01 Complete instrumentation and control system for automatic operation of tube cleaning system, protection, interlocking, indication / annunciation of differential pressure and other malfunctions etc., shall be provided. This shall consist of adequate operational hardware, local control panel (As applicable) and interconnecting control and power cabling between the control panel and various equipments in the tube cleaning system.

3.13.02 The control panel shall house all necessary instruments, indicating / annunciation lamps, alarms, differential pressure indicator, timer, function selection switches, ball monitoring system processor, relays, protection and interlocking systems, start / stop push button etc., and shall be complete with internal wiring. The control panel shall meet the requirements of the enclosed specification.

3.13.03 Pressure guages shall be provided at recirculating pump suction and discharge. All instrumentation shall be of reputed make and shall meet the requirements of the enclosed specifications.

3.14.00 **Other Accessories.**

3.14.01 Counter flanges, complete with gaskets, bolts and nuts etc., shall be supplied for ball separator inlet, outlet connections and all other terminal points Fabrication, dimensions and drilling of the flanges shall conform to the codes/standards specified in

Data Sheet-A / Section -C.

3.14.02 Ball recirculating pump, ball collector with interconnecting piping and valves, shall be mounted on a frame. For fixing the frame, necessary foundation plates, bolts, nuts etc. shall be provided.

3.14.03 Suitable lifting arrangement shall be provided for various equipments of the tube cleaning system, for handling during erection and maintenance.

3.15.00 **Materials of Construction**

Materials of various equipments in the tube cleaning system shall be corrosion resistant and consistant with the fluid handled. However, material specification for various components shall be equal to or superior to those specified in Data Sheet-A.

4.00.00 **PAINTING**

4.01.00 The surface preparation of the various equipments / components of the tube cleaning system shall be done as per the standard mentioned in Data Sheet - A and shall include the following :

a) Removal of oil, grease, dirt and swarf etc.

b) Removal of rust and scale etc.

c) Sand blasting / shot blasting.

4.02.00 All internal surfaces of the various equipments / components of the tube cleaning system, which are subjected to immersion or water spray and which are not made of stainless steel or other corrosion resistant materials after surface preparation, shall be coated with epoxy paint of approved make and quality over a coat of zinc chromite primer, unless otherwise specified in Data Sheet - A.

4.03.00 The external surfaces of the various equipments / components of the tube cleaning system after surface preparation, shall be coated with synthetic enamel paint of approved make and quality over two coats of red oxide primer, unless otherwise specified in Data Sheet -A.

5.00.00 **SHOP INSPECTION AND TESTS**

5.01.01 **General**

5.01.01 Manufacturer shall conduct all tests and stage inspections as per the approved

quality plan to ensure that the various equipments and other accessories of the tube cleaning system shall conform to the requirements of this specification and of the applicable codes / standards.

5.01.02 All materials used for manufacture /fabrication of the various equipments of the tube cleaning system shall be of tested quality. Relevant test certificates for chemical analysis, mechanical tests and heat treatment shall be made available before the final shop inspection. In case the relevant test certificates are not available, the manufacturer shall arrange to carry out the necessary tests as per the approved quality plan and applicable codes at his cost for which samples shall be identified by BHEL's representative.

5.01.03 All shop tests shall be conducted as per approved quality plan and test certificates / reports for the same shall be furnished to BHEL for approval.

5.01.04 Qualification of welding procedures and welders shall be as per ASME B&PV code, Section - IX / applicable codes.

5.2.00 **Ball Separator**

5.02.01 Chemical analysis, mechanical tests shall be carried out on materials used for body, strainer / screen, strainer / screen shaft and other appurtenances as per the applicable material specification standards.

5.02.02 All butt welded joints shall be subjected to radiographic/ ultrasonic testing as per applicable codes. However, all welded joints shall be subjected to 100% magnetic particle / penetrant testing to ensure freedom from defects.

5.02.03 Strainer / screen shaft shall be subjected to ultrasonic test as per ASTM-A388 for subsurface defects with acceptance norms as per ASME B&PV code, Section VIII, Division 1.

5.03.00 **Ball Recirculating Pump**

5.03.01 Chemical analysis, mechanical tests shall be carried out on materials used for casing, impeller, shaft, sleeves, wear rings etc., as per the applicable material specification standards.

5.03.02 The casting used for pump casing and impeller shall be sound, clean and free from porosity, blow holes, hard spots, cold shuts, distortion and other harmful defects. All accessible surfaces of the impeller shall be subjected to penetrant test as per ASTM-E165 for surface defects with acceptance norms as per ASME B&PV code, Section VIII, Division 1. No welding or repairs shall be carried out without prior permission of BHEL.

5.03.03 Pump shaft and sleeves shall be subjected to ultrasonic test as per ASTM - A388 for sub-surface defects and penetrant test after finish machining as per ASTM-E165 for surface defects.

5.03.04 Wear rings shall be subjected to penetrant test as per ASTM-E165.

5.03.05 Pump impellers and rotor assembly shall be statically and dynamically balanced as

per ISO-1940

5.04.00 **Ball Collector**

5.04.01 Chemical analysis, mechanical tests shall be carried out on materials used for body and other appurtenances / accessories as per the applicable material specification standards.

5.04.02 All but welded joints shall be subjected to radiographic / ultrasonic testing as per applicable codes. However, all welded joints shall be subjected to 100% magnetic particle / penetrant testing to ensure freedom from defects.

5.05.00 **Piping, Valves, Distributors, and Injection Nozzles.**

5.05.01 Chemical analysis, mechanical tests shall be carried out for materials used for piping, fittings, valves, distributors and injection nozzles.

5.05.02 All welded joints of distributors & injection nozzles shall be subjected to penetrant test as per ASTM-E165 for surface defects with acceptance norms as per ASME B&PV code, Section VIII, Division 1.

5.05.03 Inspection and testing of valves including leakage test shall be carried out as per the requirements of the applicable standards. Valve stem and ball shall be subjected to penetrant test as per ASTM-E165.

5.05.04 All materials for various nozzles, stubs, gaskets, nuts, bolts etc. shall be of tested quality and correlating test certificates for chemical and mechanical properties shall be furnished.

5.06.00 **Rubber Lining (as applicable)**

Rubber lining shall be subjected to surface crack test, 100% spark and hardness tests and shall be checked for layer thickness, defects etc.

5.07.00 **Flanges**

5.07.01 Chemical and mechanical test certificates shall be furnished for flange materials.

5.07.02 In case of fabricated flanges, all the welds shall be subjected to 100% radiography as per ASME B&PV code, Section VIII, Division 1.

5.07.03 In case of forged flanges, ultrasonic testing shall be carried out as per ASTM-A 388.

5.07.04 If the thickness of the plate used for flanges is 40mm or more, the same shall be checked ultrasonically as per ASTM-A435 to demonstrate the absence of lamination and lack of fusion etc.

5.07.05 Flanges shall be checked for edge preparation, fit up and satisfactory working with matching parts.

5.08.00 **Dimensional Checks.**

Dimensional checks for various equipments/components of the tube cleaning system shall be carried out as per assembly drawing approved by BHEL. Alignment and fit up of movable parts shall be checked.

5.09.00 **Hydrostatic Test**

Hydrostatic test shall be conducted on various assemblies / equipments / components of the tube cleaning system at a pressure of 1.5 times and design pressure. The duration of the test shall be minimum 30 minutes.

5.10.00 **Leakage Test**

Leakage test shall be conducted at the design pressure on all assemblies of the tube cleaning system to demonstrate that the assemblies are leak tight and no water seepage shall take place at various nozzles and valve connections.

5.11.00 **Performance Test on Recirculating Pump**

Performance test on recirculating pump with drive motor shall be conducted as per BS-599 / ASME PTC 8.0. Performance curves i.e., discharge flow Vs head, discharge flow Vs power consumption and discharge flow Vs efficiency shall be plotted and acceptance norms shall be as per BS-599 / ASME PTC 8.0. Vibration and noise shall be measure and acceptance norms shall be as per Hydraulic Institute (USA) standard.

5.12.00 **Functional Tests**

Various assembles / equipments / components of the tube cleaning system shall be subjected to functional tests and the following shall be checked.

5.12.01 Smooth and free operation of all movable parts.

5.12.02 Interlock and sequential operation.

5.12.03 Satisfactory operations of ball monitoring system.

5.12.04 Satisfactory operations of actuators torque switches, limit switches etc.

6.00.00 **TESTING AT SITE**

After completion of installation at site, the tube cleaning system will be tested to check that the tube cleaning system performance meets the requirements of this specification. Rectification of all defects shall have to be done by the supplier at no extra cost to the owner / purchaser. However, the owner / purchaser reserves the right to reject the equipments / parts not meeting the requirement if the deficiency still persists.

7.0.0 Performance Guarantee and Bid Evaluation criteria for Condenser on Load Tube Cleaning System.

The Tube Cleaning Systems shall be guaranteed to meet the performance requirements specified in Section-D , Data Sheet A and Guarantee schedule and also for trouble free operation after commissioning. Schedule of performance guarantees (enclosed in Volume III) duly filled and signed shall be furnished with the bid.

The Performance guarantees of equipments shall stand valid till the satisfactory completion of performance testing & its acceptance by BHEL/ Customer. If the guarantee period specified in the Commercial Specification is higher, same shall prevail.

7.01.00 Performance Parameters to be guaranteed by bidders shall be as under :

i) Pressure drop in ball separator in clean condition viz. after back washing.

ii) Percentage recovery of balls (min. 95% recovery)

iii) Life of Sponge Rubber Ball (Min. 4 weeks)

7.02.00 Bidder to note that bids shall be evaluated on account of pressure drop across ball collecting strainer (in clean condition) and liquidated damages on account of not meeting the same during PG test shall be in accordance with following :

A) Bid Evaluation Criteria & Liquidated Damages:

The bids received shall be evaluated for Pressure drop across balls collecting strainers :

- The permissible limit of pressure drop across balls collecting strainers in clean condition shall be 0.15 MWC.
- If the pressure drops quoted are higher than above limit, the bids shall be technically loaded @ indicated in Data Sheet A .
- However no advantage shall be given for pressure drops quoted less than above permissible limit.
- The maximum acceptable limit for pressure drop across balls collecting strainer shall be (with technical loadings) 0.2 MWC.

  The bids will be technically rejected for pressure drops quoted higher than above maximum limit.

- The guaranteed pressure drops shall be demonstrated at site by bidder and if found higher shall be subject to LD @ twice the bid evaluation factor as above.

7.03.00 **OtherGuaranteed Parameters to be demonstrated at site**

i) Life of sponge rubber balls shall be minimum 4 weeks.

ii) Percentage recovery of balls shall be minimum 95%.

Any deviation to above balls life and percentage recovery will not be accepted.

Bidder to indicate the life of sponge rubber ball and nos. of balls lost during 1000 hours of plant operation in the Guarantee schedule and shall demonstrate same at site.

In case the successful bidder fails to demonstrate any of these parameters he shall carry out modifications at his own cost, to purchasers approval.

In case bidder fails to demonstrate above parameters to purchaser's satisfaction even after modification carried by him at site, the purchaser has the right to reject the equipment out rightly.

8.00.00 **QUALITY ASSURANCE & QUALITY PLAN**

8.01.00 The tube cleaning system and other accessories to be supplied, shall have assured quality and workmanship.

8.02.00 Typical quality plans are enclosed herewith this specification for bidder's guidance. The bidder shall furnish his own quality plan based on materials, equipments and components of the tube cleaning system being offered.

9.00.00 **NAME PLATE AND TAG NUMBERS**

9.01.00 Ball separator, recirculating pump, ball collector shall be provided with a permanently attached brass or stainless steel plate indicating the following details :-

a) Design and maximum flow rates.
b) Design and test pressures.
c) Design temperature.
d) Empty and operating weights.

9.02.00 Each valve in the tube cleaning system shall be provided with a name plate indicating the following :-

a) Service.
b) Design and test pressures.
c) Maximum flow and flow direction.
d) Size.
e) Tag Number.

Tag Numbers will be indicated on the drawings submitted for approval during contractstage.

9.03.00 Each motor shall be provided with a name plate indicating the following details :

a) Supply conditions.
b) KW Rating.
c) Make.

10.00.00 **DRAWING, DATA & INFORMATION TO BE SUBMITTED AFTER THE AWARD OF CONTRACT.**

The drawings, data and other documents as required in Data Sheet-C shall be furnished after the award of contract.

Manufacturer's Name & Address	STANDARD QUALITY PLAN	BHEL Doc No.:	PE-QP-999-165-N008 REV-01
	Vendor Q.P. NO.	PROJECT:	
	INDEX / PACKAGE : COLTCS	CUSTOMER:	
	Date :	PURCHASER:	
	Page 01 of 15	CONSULTANT:	
		P.O. No.	

SL. NO.	DESCRIPTION	PAGE NO.
1	**BALL SEPARATOR**	2 TO 5
	WORM GEAR	6
	ACTUATORS	6
2	**BALL RECIRCULATION SKID**	7
	BALL VESSEL	7,8
	BALL INJECTION NOZZLE	8
	BALL RECIRCULATING PUMP	9
	BALL VALVE	10
	RECIRCULATING PUMP MOTOR	11
3	**V. PIECE**	11
4	**BALL OVERSIZE MONITOR**	12
5	**PRESSURE GAUGE,DP GAUGE,DP SWITCH & DP TRANSMITTER**	13
6	**CLEANING BALLS**	13
7	**ALL COMPONENT & EQUIPMENT**	13
8	**STARTER PANEL**	14
9	**FASTENERS**	15

Note :Items not included in quality plan to be inspected as per approved data sheet/drawings

ANNEXURES

DRY RUN TEST PROCEDURE FOR BALL SEPERATOR
HYDRO STATIC TEST PROCEDURE
LEAK TIGHTNESS TEST PROCEDURE
PACKING PROCEDURE

LEGEND

* Records indentified with "STAR" shall be essentially included by contractor in QA Documentation.
** M :Manufacturer / Manufacturer's Sub-contractor
C : Contractor O : Owner
Indicate : "P" - Perform, "W" - Witness and "V" - Verification

Manufacturer / Sub-Contractor	Contractor	Reviewed By	Name & Sign. Of approving authority & Seal
Signature			

		Manufacturer's Name & Address			STANDARD QUALITY PLAN				BHEL Doc No.:				PE-QP-999-165-N008
							Vendor Q.P. NO:		PROJECT:				
					Item : Ball Separator		PACKAGE : COLTCS		CUSTOMER:				
		P.O. No.							PURCHASER:				
							Date :		CONSULTANT:				
							Page 02 of 15						
Sl. No.	Component / Operation	Characteristics Checked	Class	Type of Check	Quantum of Check	Reference Documents	Acceptance Norms	Format of Record		Agency M	Agency C	Agency O	Remarks
1	2	3	4	5	6	7	8	9	D*	**	10		11
1.0.0	**Ball Separator**												
1.1.0	Raw Material												
[a]	Housing Shell, Nozzle flanges	Chemical properties & Physical properties	Major	Chemical Analysis & Mechanical test	One sample/cast / heat / batch	Approved drg/Data sheet	Approved drg/Data sheet	Mill Test Certificate / Lab test report/Raw material flow sheet	*	P	V	V	
		Surface defects	Minor	Visual	100%	Approved drg/Data sheet	Approved drg/Data sheet	Inspection report/ Raw material Flow sheet	–	P	V	V	
		Sub Surface Defects	Major	Ultrasonic test	100%	ASME SA 435	ASME SA 435	Inspection report	*	P	V	V	Plates > 20mm Thk only (UT - Full Volume)
[b]	Nozzle Pipes	Chemical properties & Physical properties	Major	Chemical Analysis & Mechanical test	One sample/heat	Approved drg/Data sheet	Approved drg/Data sheet	Mill.Test Certificate / Lab test report/Raw material flow sheet	*	P	V	V	
		Surface defects	Minor	Visual	100%	Approved drg/Data sheet	Approved drg/Data sheet	Inspection report/ Raw material Flow sheet	–	P	V	V	
		Leak Tightness	Major	Hydrostatic test	100%	Approved drg/Data sheet	Approved drg/Data sheet	Mill Test Certificate	*	P	V	V	
[c]	Main Flange	Chemical properties & Physical properties	Major	Chemical Analysis & Mechanical test	One sample/cast / heat / batch	Approved drg/Data sheet	Approved drg/Data sheet	Manufacturer's Test Certificate	*	P	V	V	
		Heat treatment (Normalising)	Major	Verification	HT Chart	Approved drg/Data sheet	Approved drg/Data sheet	Manufacturer's Test Certificate	*	P	V	V	If casting
		Surface defects	Critical	Magnetic particle test	100%	Approved drg/Data sheet	Approved drg/Data sheet	Inspection report	*	P	V	V	If casting
		Sub-surface defects	Critical	Ultrasonic test	100%	ASME SA609 / SA 435	ASME SA609 Level II / SA 435 / SA 388	Inspection report	*	P	V	V	
[d]	Screen Shaft	Chemical properties & Physical properties	Major	Chemical Analysis & Mechanical test	One sample/heat	Approved drg/Data sheet	Approved drg/Data sheet	Mill Test Certificate / Lab test report/Raw material flow sheet	*	P	V	V	

LEGEND

* Records indentified with "STAR" shall be essentially included by contractor in QA Documentation.

** M :Manufacturer / Manufacturer's Sub-contractor

C : Contractor O : Owner

Indicate : "P" - Perform, "W" - Witness and "V" - Verification

Manufacturer / Sub-Contractor	Contractor	Reviewed By	Name & Sign. Of approving authority & Seal
Signature			

		Manufacturer's Name & Address			STANDARD QUALITY PLAN				BHEL Doc No.:				PE-QP-999-165-N008
							Vendor Q.P. NO:		PROJECT:				
		P.O. No.			Item : Ball Separator		PACKAGE : COLTCS		CUSTOMER:				
							Date :		PURCHASER:				
							Page 03 of 15		CONSULTANT:				
Sl. No.	Component / Operation	Characteristics Checked	Class	Type of Check	Quantum of Check	Reference Documents	Acceptance Norms	Format of Record		Agency M	Agency C	Agency O	Remarks
1	2	3	4	5	6	7	8	9	D*	**	10		11
		Surface defects on machined area	Critical	Penetrant test	100%	ASME Sec.VIII Div.1	ASME Sec.VIII Div.1 Appendix 8	Inspection report	*	P	V	V	
		Sub-surface defects	Critical	Ultrasonic test	100%	ASME SA745	ASME SA745	Inspection report	*	P	V	V	
[e]	Screen ribs	Chemical properties & Physical properties	Major	Chemical Analysis & Mechanical test	One sample / heat	Approved drg/Data sheet	Approved drg/Data sheet	Mill Test Certificate / Lab test report/Raw material flow sheet	*	P	V	V	
		Corrosion Resistance	Major	IGC	One/Heat	ASTM A 923	ASTM A 923	Test Report/Lab test report	*	P	V	V	
		Surface Defects	Minor	Visual	100%	Approved drg/Data sheet	Approved drg/Data sheet	Inspection report/ Raw material Flow sheet	–	P	V	V	
[f]	Ball Extraction Nozzle Pipe [Duplex Stainless Steel]	Chemical properties & Physical properties	Major	Chemical Analysis & Mechanical test	One sample / cast/heat/ batch	Approved drg/Data sheet	Approved drg/Data sheet	Mill Test Certificate / Lab test report/Raw material flow sheet	*	P	V	V	
		Surface Defects	Minor	Visual	100%	Approved drg/Data sheet	Approved drg/Data sheet	Inspection report/ Raw material Flow sheet	–	P	V	V	
		Leak Tightness	Major	Hydrostatic Test	100%	Approved drg/Data sheet	Approved drg/Data sheet	Manufacturer's Test Certificate	*	P	V	V	
1.2.0	Inprocess Quality Control												
1.2.1	Welding procedure specification	Correctness	Critical	Scrutiny	100%	ASME Sec.IX	ASME Sec.IX	QW 482 of ASME Sec.IX	*	P	V	V	
1.2.2	Welding procedure qualification	Weld soundness	Critical	Physical test	100%	ASME Sec.IX	ASME Sec.IX	QW 483 of ASME Sec.IX	*	P	V	V	Welding procedure already approved by BHEL/LRQA/GL/DNV/TUV shall be employed for this job.
1.2.3	Welder performance qualification	Weld soundness	Critical	Radiography	100%	ASME Sec.IX	ASME Sec.IX	QW 484 of ASME Sec.IX	*	P	V	V	Welders already qualified by BHEL/LRQA/GL/DNV/TUV shall be employed for this job.
1.2.4	Fit-up of butt weld	Alignment and dimensions	Major	Template, visual	100%	Manufacturing Drawing	ASME Sec VIII Div.1	Log book		P	W/V	–	BHEL to witness > 20mm thick butt joint
1.2.5	Fit-up of shell flange and nozzle assembly to shell	Orientation,alignment and dimensions	Major	Template, visual	100%	Manufacturing Drawing	ASME Sec VIII Div.1	Log book		P	–	–	

LEGEND

* Records indentified with "STAR" shall be essentially included by contractor in QA Documentation.

** M Manufacturer / Manufacturer's Sub-contractor

C : Contractor O : Owner

Indicate : "P" - Perform, "W" - Witness and "V" - Verification

Manufacturer / Sub-Contractor	Contractor	Reviewed By	Name & Sign. Of approving authority & Seal
Signature			

		Manufacturer's Name & Address			STANDARD QUALITY PLAN				BHEL Doc No.:				PE-QP-999-165-N008
							Vendor Q.P. NO:		PROJECT:				
		P.O. No.			Item : Ball Separator		PACKAGE : COLTCS		CUSTOMER:				
							Date :		PURCHASER:				
							Page 04 of 15		CONSULTANT:				
Sl. No.	Component / Operation	Characteristics Checked	Class	Type of Check	Quantum of Check	Reference Documents	Acceptance Norms	Format of Record		Agency M	Agency C	Agency O	Remarks
1	2	3	4	5	6	7	8	9	D*	**	10		11
1.2.6	**Weld quality for Pressure Parts**												
	[a] Root run	Surface defects	Major	Penetrant test / Visual	100%	ASME Sec.VIII Div.1	ASME Sec.VIII Div.1 Appendix 8	Operation Process Sheet	–	P	V	V	
1.2.7	[a] Completed butt welds	1.Surface defects	Major	Penetrant test	100%	ASME Sec.VIII Div.1	ASME Sec.VIII Div.1 Appendix 8	Inspection report	*	P	V	V	
		2.Sub-surface defects	Critical	Radiography test	10% of total weld length & 100% T Joints	ASME Sec.VIII Div.1	ASME Sec.VIII Div.1 Appendix 4 / UW-52	Radiographs & Inspection report	*	P	V	V	RT films will be reviewed by BHEL
	[b] Completed fillet welds	Surface defects	Major	Penetrant test	100%	ASME Sec.VIII Div.1	ASME Sec.VIII Div.1 Appendix 8	Inspection report	*	P	V	V	
1.2.8	Fabricated Shell (Prior to sand blasting)	1.Dimensions, Orientation	Major	Measurement by visual	100%	Manufacturing Drawing	Manufacturing Drawing	Inspection report	*	P	V	V	
		2. Hydro test	Critical	Hydrostatic Pr. @ 1.5 times design pr. (positive) Duration 30 minutes	100%	ASME Sec.VIII Div.1	No Leakage	Inspection report	*	P	W	V	
1.2.9	Pickling and Passivation	Protection Layer	Major	Visual	100%	IS : 10117	IS : 10117	Log Book	–	P	–	–	
1.2.10	Final tests (completed equipments) - After assembly	1.Dimensions, orientation, workmanship & finish	Major	Measurement by visual	100%	G.A.drawing	G.A.drawing	Inspection report	*	P	W	W	
		2.Leak tightness for assembly	Critical	Leak Tightness @ design pr. (positive) Duration 30 minutes	100%	ASME Sec.VIII Div.1	No Leakage	Inspection report	*	P	W	W	
		3.Dry function test for Ball Separator	Critical	Operational test	100%	Approved procedure	Approved procedure	Inspection report	*	P	W	W	

LEGEND

* Records indentified with "STAR" shall be essentially included by contractor in QA Documentation.

** M :Manufacturer / Manufacturer's Sub-contractor

C : Contractor O : Owner

Indicate : "P" - Perform, "W" - Witness and "V" - Verification

Manufacturer / Sub-Contractor	Contractor	Reviewed By	Name & Sign. Of approving authority & Seal
Signature			

DISCLAIMER: THIS DOCUMENT IS BEING REVIEWED